TEKNO RC

BUILDING INSTRUCTIONS

ET48.3

Introduction

Thank you for purchasing the Tekno RC ET48.3 1/8th Scale Electric Competition Truggy Kit. The ET48.3 represents a continued evolution in the 1/8th scale electric class. Since the original ET48 was released in 2014, we have continued to focus on refining and improving the vehicle to provide superior performance and value to our customers. We are always working on new projects, so please check our website (www.teknorc.com) regularly for the latest news, parts, and kits. Thanks again.

Additional equipment and parts needed:

2/3 channel radio transmitter and receiver
1/8th scale ESC and motor
High torque steering servo (300 oz/in torque minimum)
4-6s LiPo battery
1/8th scale truggy tires, wheels & CA glue
Paint for Body
MOD1 Pinion (TKR4171->TKR4190)

Tools needed:

Hex drivers 1.5mm (TKR1104), 2.0mm (TKR1105), 2.5mm (TKR1106)
Nut drivers 5.0mm (TKR1107, 5.5mm (TKR1108), 7.0mm (TKR1109)
17mm Wheel Wrench (TKR1116)
Pivot Ball and Shock Multi-tool (TKR1115, for shock assembly)
4mm and 5mm turnbuckle wrench (TKR1103)
Hobby knife
Needle-nose pliers
4mm arm reamer
Lexan Body Scissors

Disclaimer: Tekno RC is not responsible or liable for any property or personal damage, loss, or injury incurred as a result of using this product. This kit is meant for use by persons 14 years of age or older and in the strict confines of a legally permitted RC track or facility.

Warnings: Always double-check that your radio gear is working properly before operating vehicle. Never operate the vehicle indoors (unless the RC track is an indoor facility). Use caution while operating vehicle so as not to collide with people who may be turn marshalling or who might otherwise not be aware that a fast moving RC vehicle is in the vicinity.

Warranty: We warrant that the parts included in this kit are free from defects. If you find a defective part in your kit, please contact us @ info@teknorc.com and we will help you to resolve the issue. We do not warranty parts that may be broken during operation of the vehicle or otherwise. Refer to the end of this instruction manual for a listing of spare/replacement and option parts. All spare parts and other info are available on our website (www.teknorc.com) and through our network of domestic and international dealers and distributors.

Bag A

Center Differential (overview)

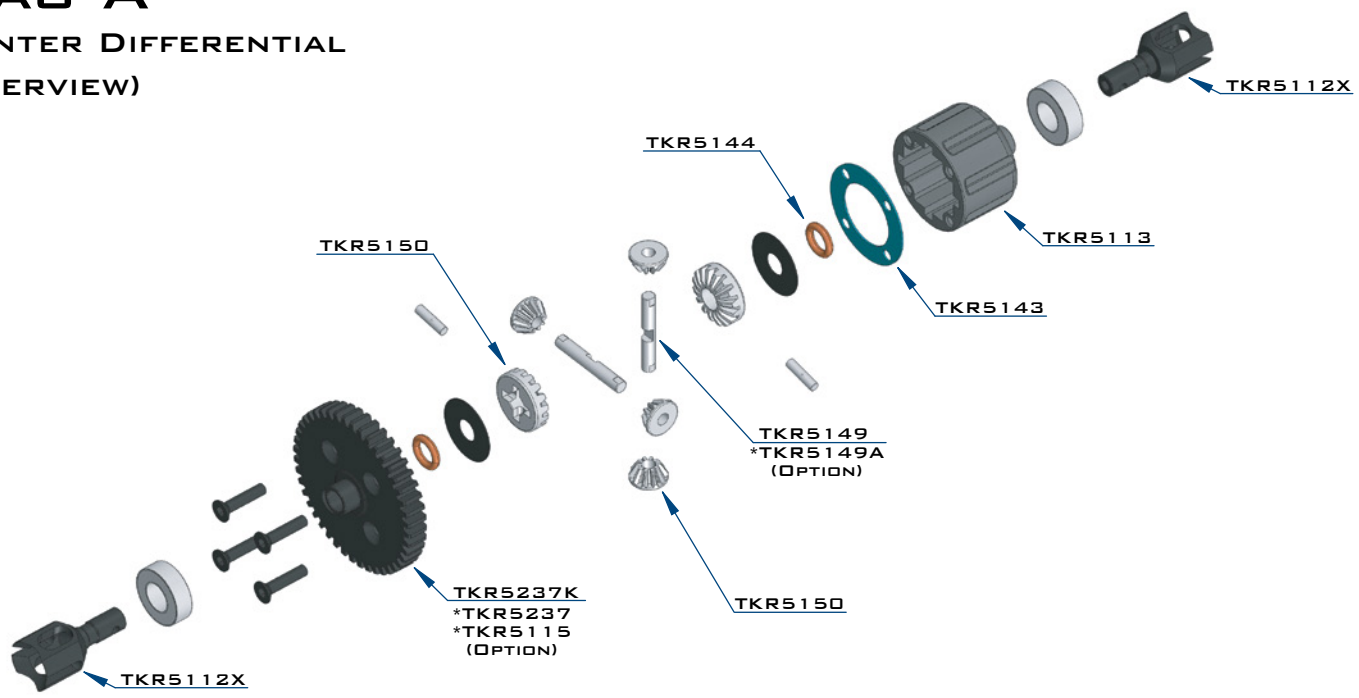

Step A-1

Apply grease to the groove where the o-ring is placed as well as the o-ring itself

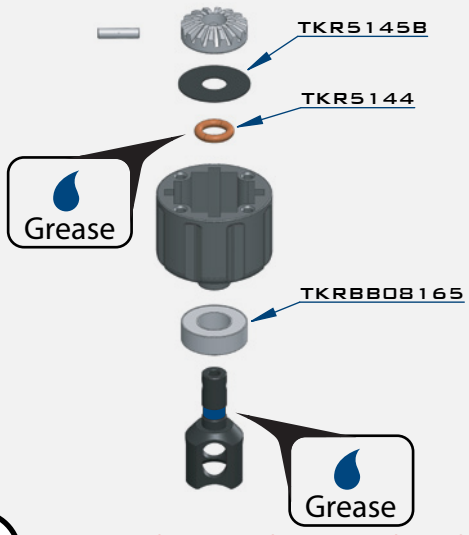

Apply grease to the groove in the outdrive

Step A-2

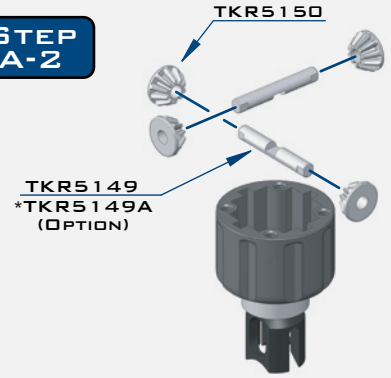

Step A-3

Fill with 10,000 wt oil to 1mm below full
DO NOT OVER FILL

Step A-4

Apply grease to the groove in the outdrive

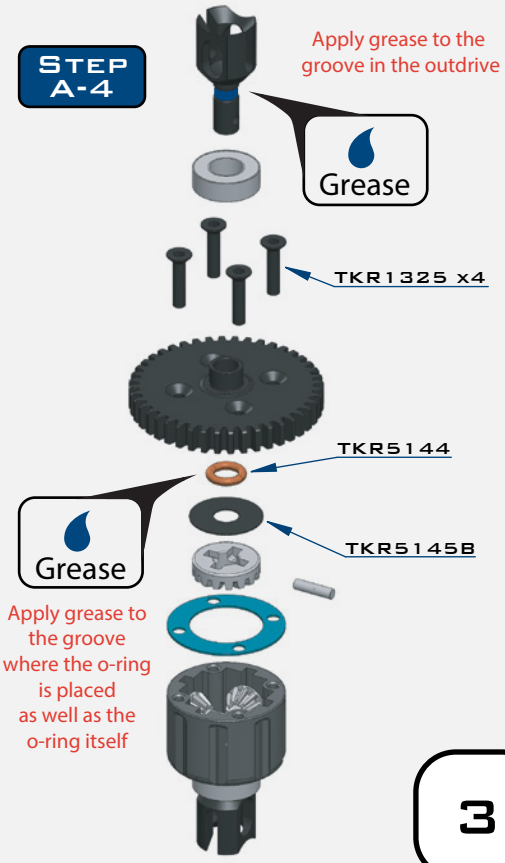

Apply grease to the groove where the o-ring is placed as well as the o-ring itself

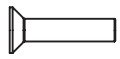

x4

TKR1325
M3x14mm Flat Head Screw

x2

TKR5144
Differential O-rings

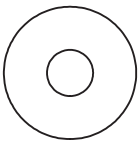

x2

TKR5145B
Differential Shims (6x17mm)

x2

TKRBB08165
Ball Bearing(8x16x5mm)

Bag B

Front and Rear Differential (overview)

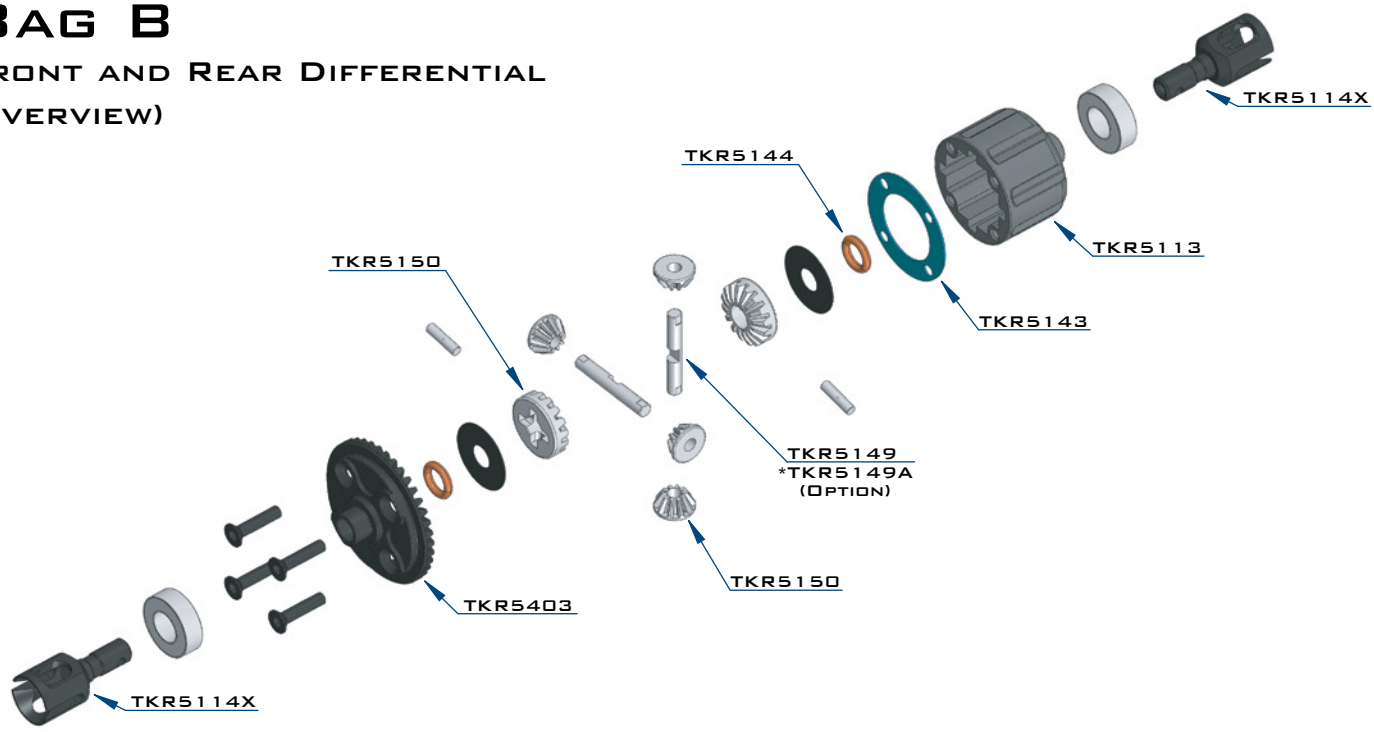

Step B-1

Repeat for rear diff

Apply grease to the groove where the o-ring is placed as well as the o-ring itself

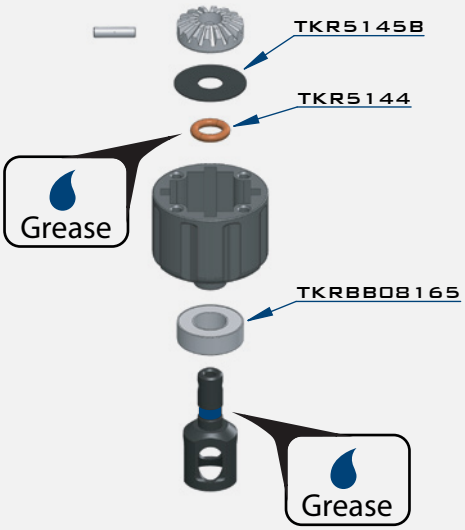

Apply grease to the groove in the outdrive

Step B-2

Repeat for rear diff

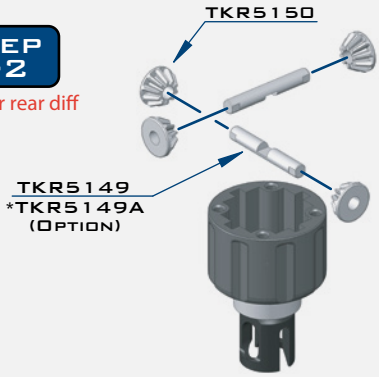

Step B-3

Repeat for rear diff

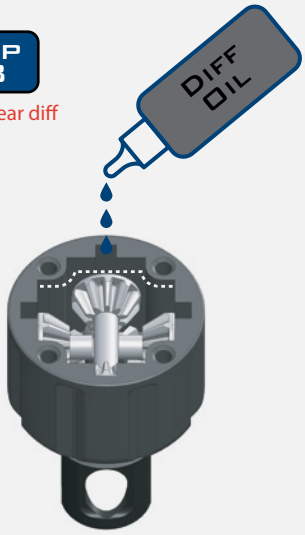

Fill FRONT with 10,000 wt oil
Fill REAR with 5,000 wt oil
to 1mm below full
DO NOT OVER FILL

Step B-4

Repeat for rear diff

Apply grease to the groove in the outdrive

Apply grease to the groove where the o-ring is placed as well as the o-ring itself

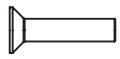

x8

TKR1325
M3x14mm Flat Head Screw

x4

TKR5144
Differential O-rings

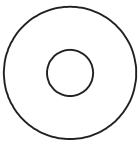

x4

TKR5145B
Differential Shims (6x17mm)

x4

TKRBB08165
Ball Bearing(8x16x5mm)

Bag C

Front Gearbox (overview)

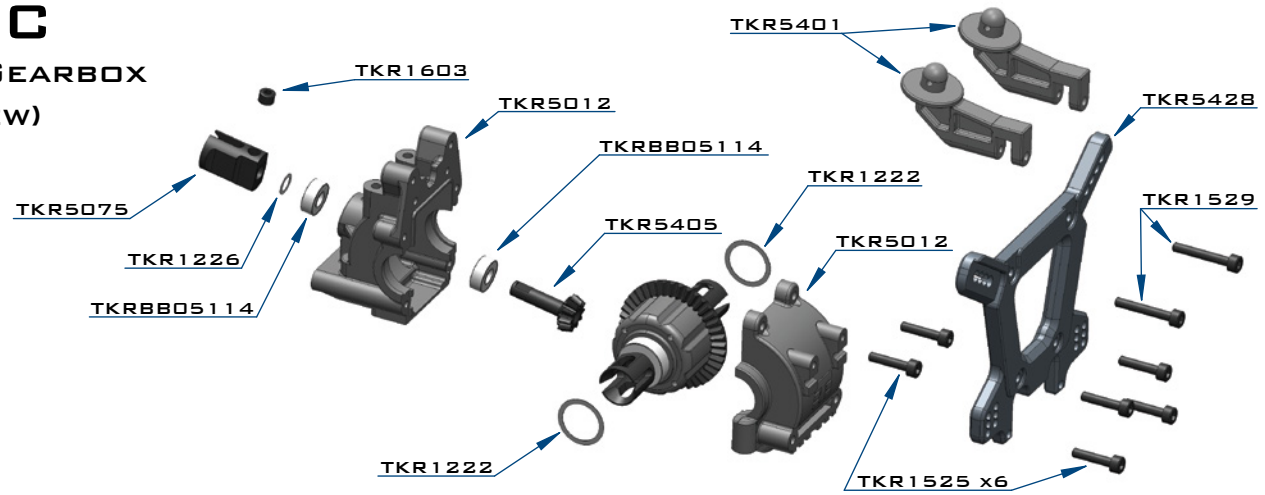

Step C-1

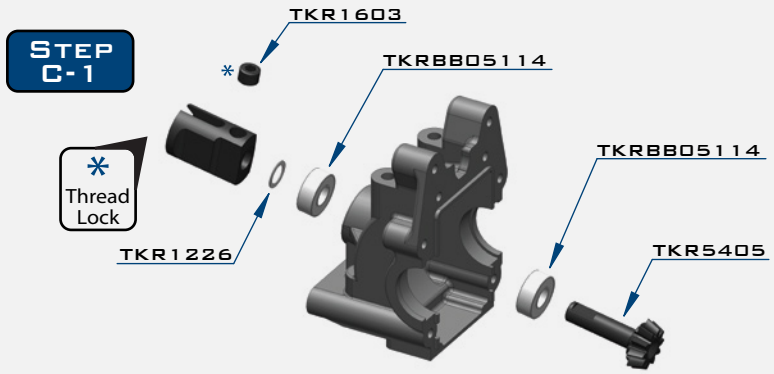

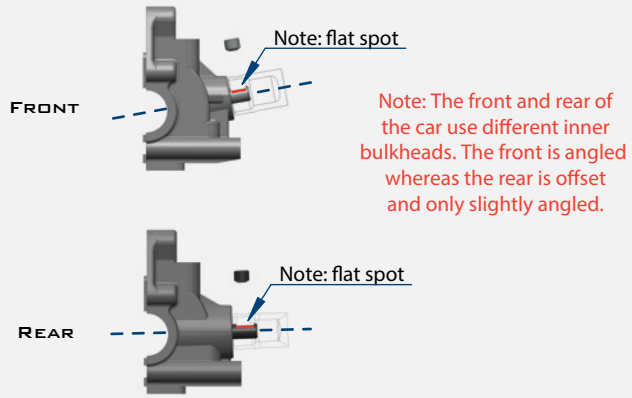

Note: The front and rear of the car use different inner bulkheads. The front is angled whereas the rear is offset and only slightly angled.

Note: TKR1222 - The gear mesh should be as close as possible without any binding. Test the fitment of the diff with both TKR1222 shims on the gear-side of the diff. If the diff turns freely without binding, continue to next step. If the diff binds and does not turn freely (it will make a grinding or crunching sound when spun), remove one TKR1222 shim from the gear side and install it onto the other side of the diff. Reassemble and test the mesh again. If it is still binding, remove the second TKR1222 shim from the gear side and install it onto the other side of the diff. When you are satisfied that you have the best gear mesh possible continue to the next step.

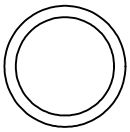

x2

TKR1222
13x16x0.1mm Diff shim

x1

TKR1226
5x7x0.2mm shim

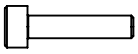

x6

TKR1525
M3x14mm Cap Head Screw

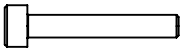

x2

TKR1529
M3x20mm Cap Head Screw

x1

TKR1603
M5x4mm Set Screw

x2

TKRBB05114
Ball Bearing (5x11x4)

Step C-2

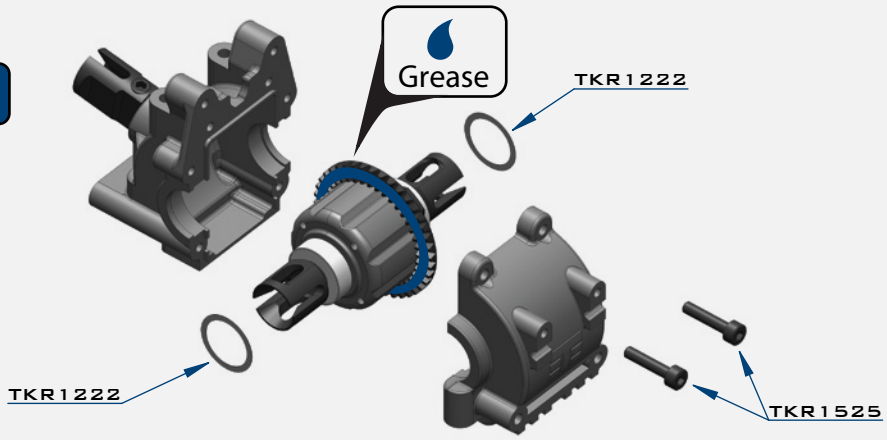

Step C-3

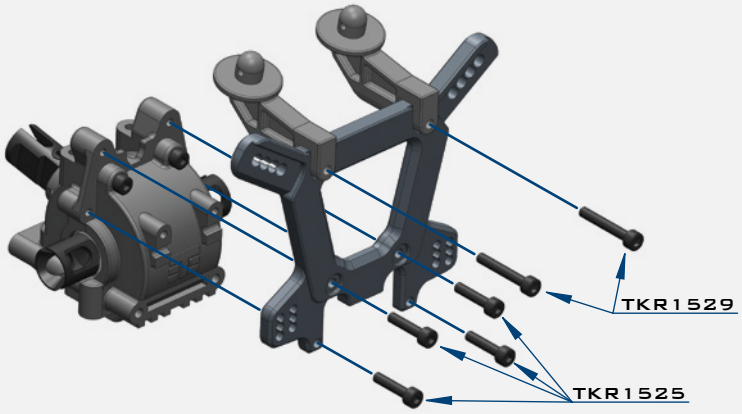

Bag D

Rear Gearbox (overview)

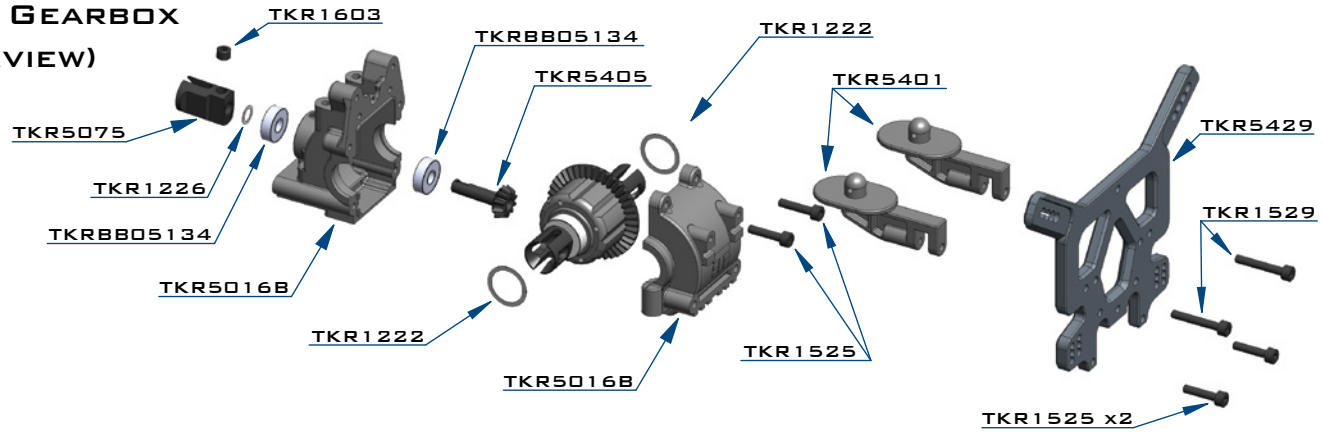

Step D-1

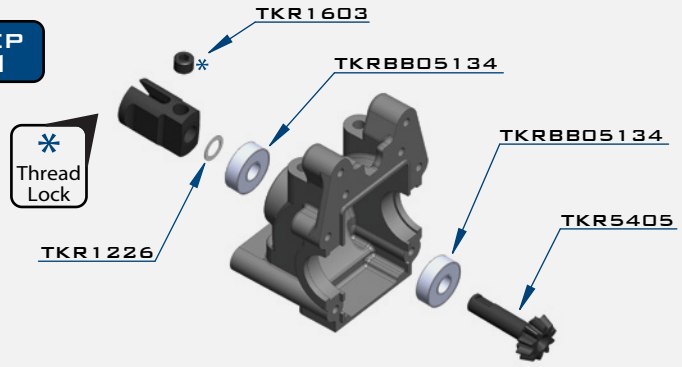

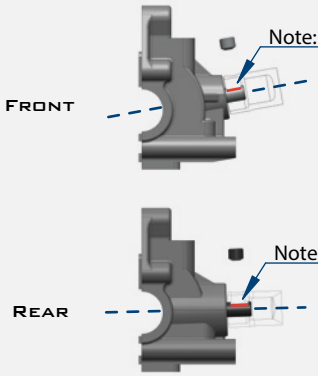

Note: The front and rear of the car use different inner bulkheads. The front is angled whereas the rear is offset and only slightly angled.

Note: TKR1222 - The gear mesh should be as close as possible without any binding. Test the fitment of the diff with both TKR1222 shims on the gear-side of the diff. If the diff turns freely without binding, continue to next step. If the diff binds and does not turn freely (it will make a grinding or crunching sound when spun), remove one TKR1222 shim from the gear side and install it onto the other side of the diff. Reassemble and test the mesh again. If it is still binding, remove the second TKR1222 shim from the gear side and install it onto the other side of the diff. When you are satisfied that you have the best gear mesh possible continue to the next step.

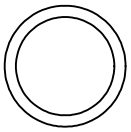

x2

TKR1222
13x16x0.1mm Diff Shim

x1

TKR1226
5x7x0.2mm shim

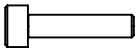

x4

TKR1525
M3x14mm Cap Head Screw

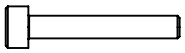

x2

TKR1529
M3x20mm Cap Head Screw

x1

TKR1603
M5x4mm Set Screw

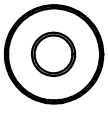

x2

TKRBB05134
Ball Bearing (5x13x4)

Step D-2

Step D-3

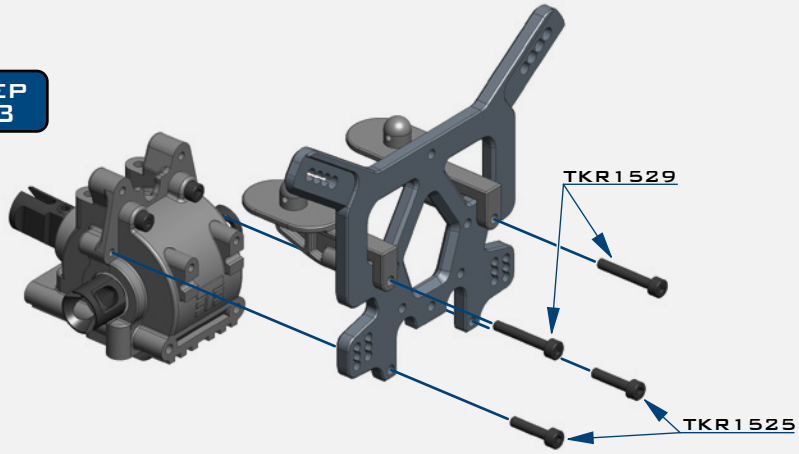

Bag E

Low Profile Wing Mount

Step E-1

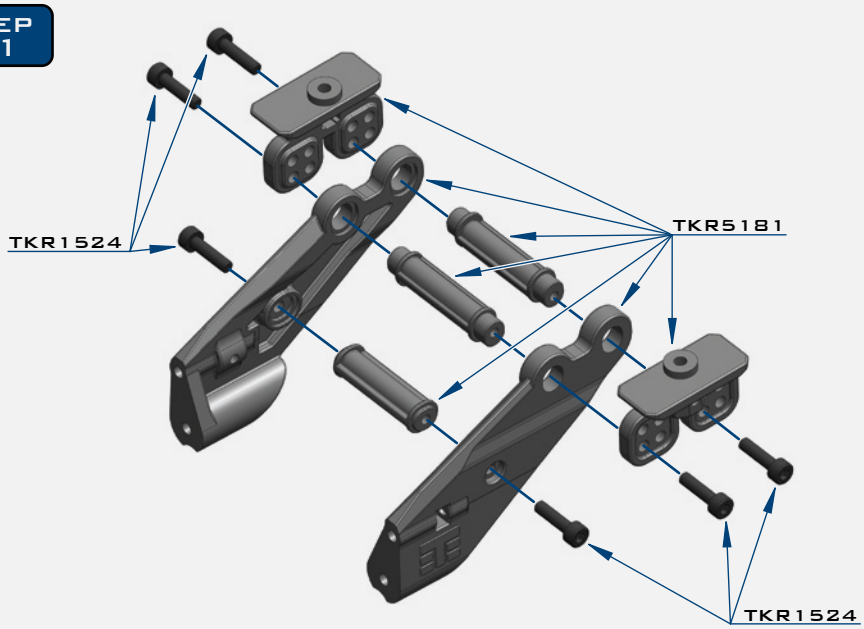

Settings

Position Settings

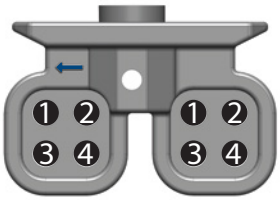

1 - REARWARD LOW
2 - FORWARD LOW
3 - REARWARD HIGH
4 - FORWARD HIGH

Note: Stock position setting is # 3, Rearward High

Downforce Settings

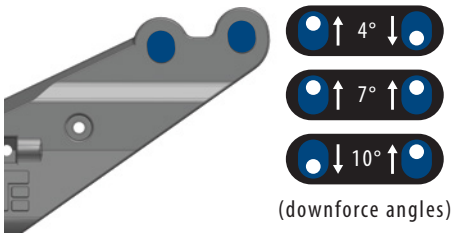

(downforce angles)

Note: Stock downforce setting is 4°

Step E-2

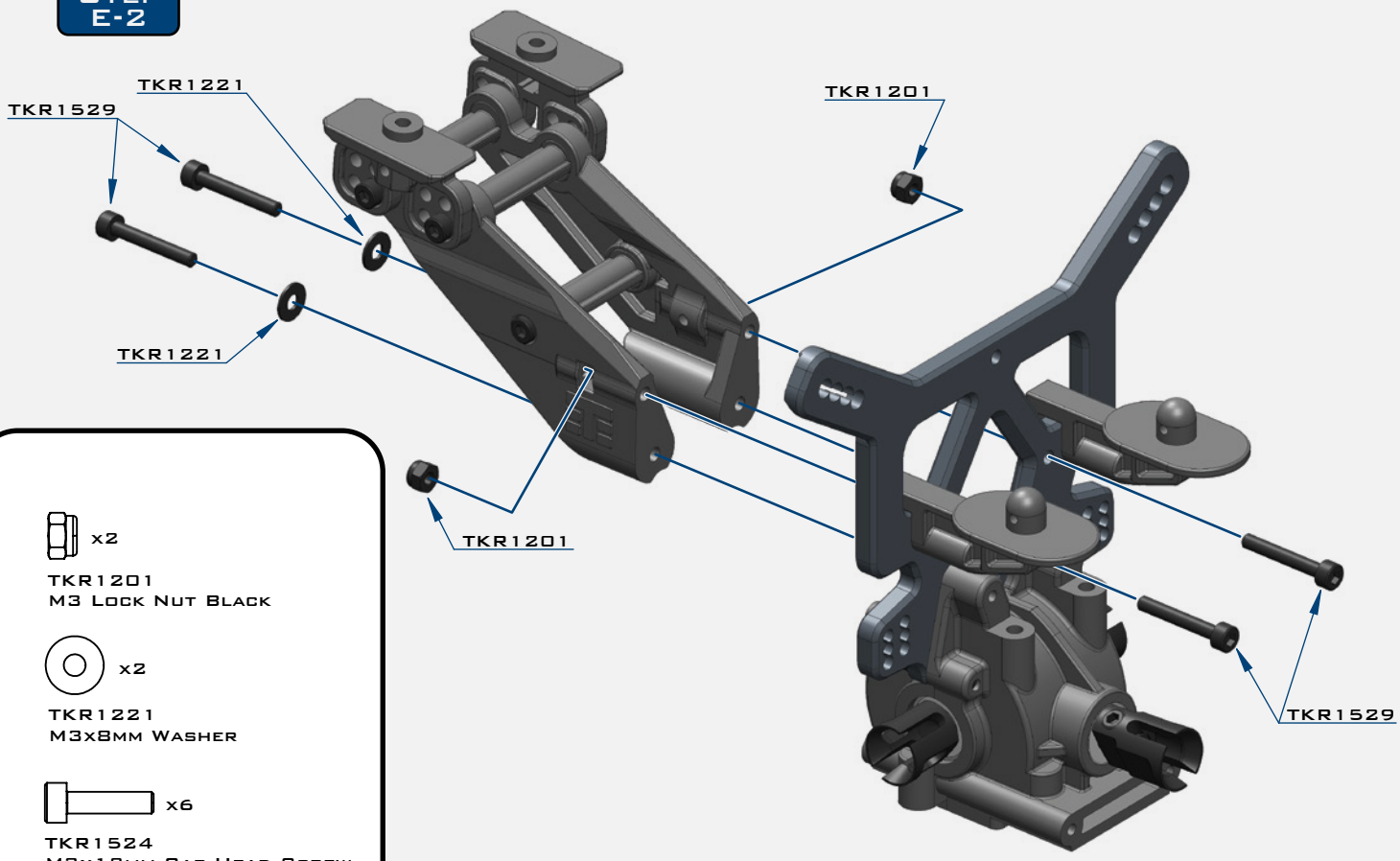

x2
TKR1201
M3 Lock Nut Black

x2
TKR1221
M3x8mm Washer

x6
TKR1524
M3x12mm Cap Head Screw

x4
TKR1529
M3x20mm Cap Head Screw

Bag F

Rear End

Step F-1

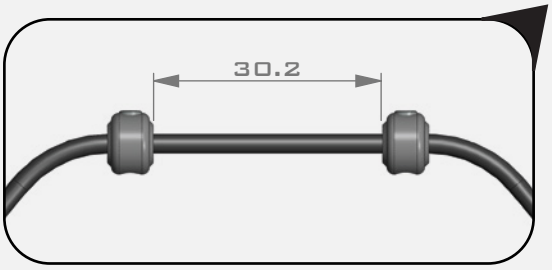

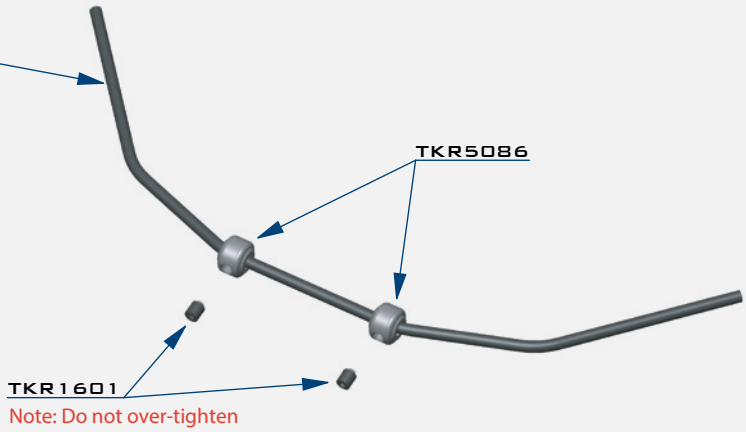

Step F-2

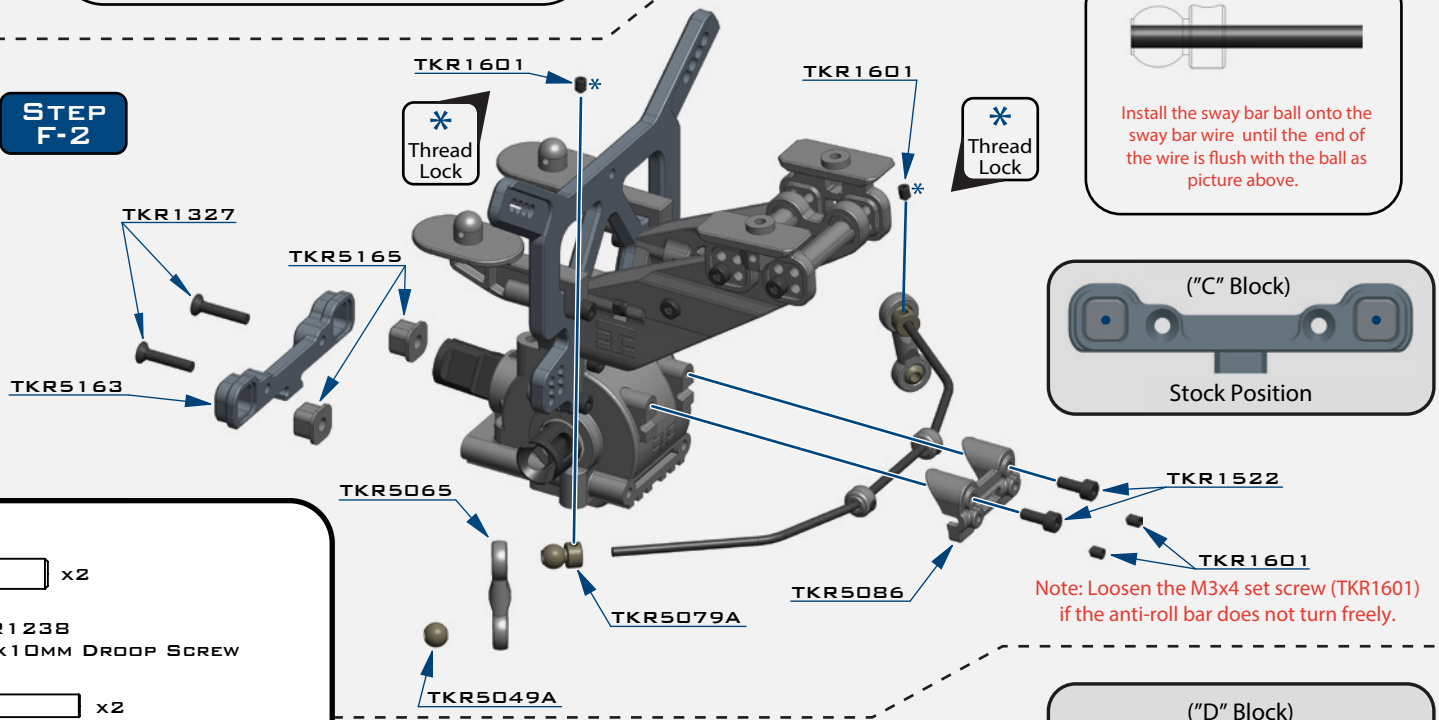

Step F-3

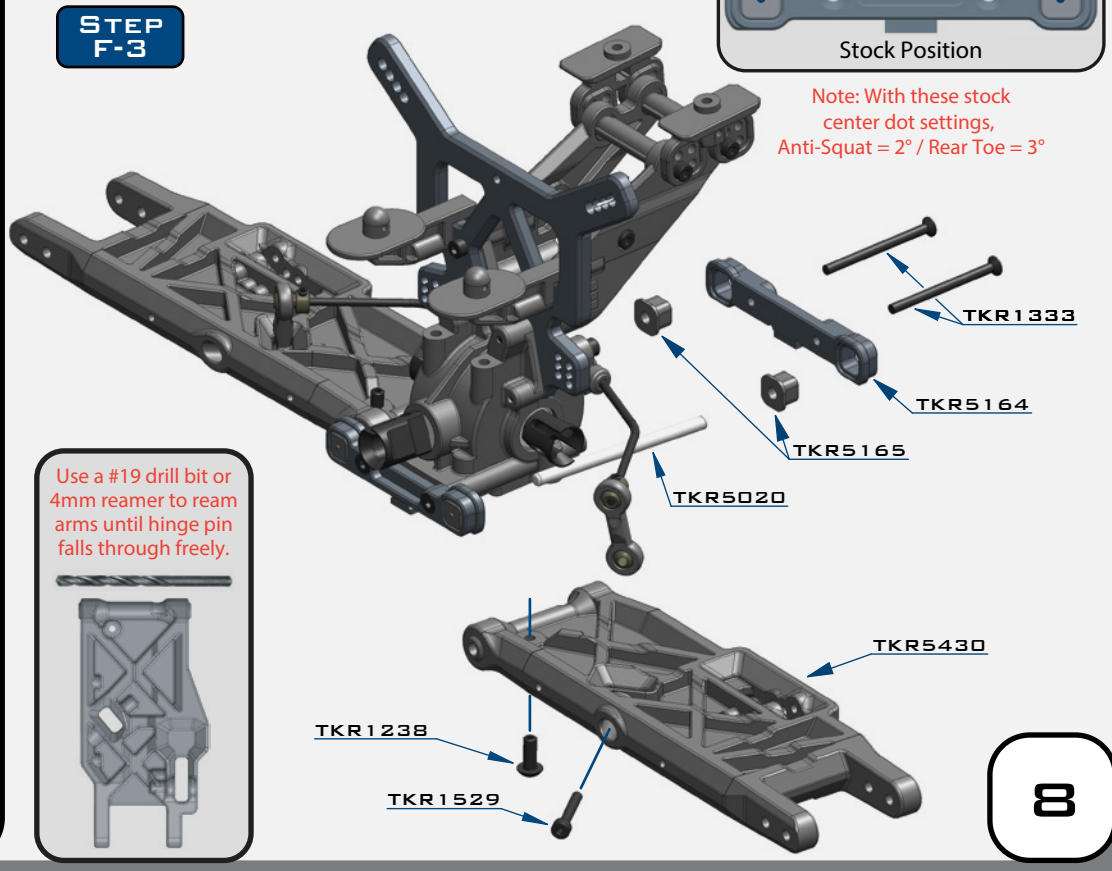

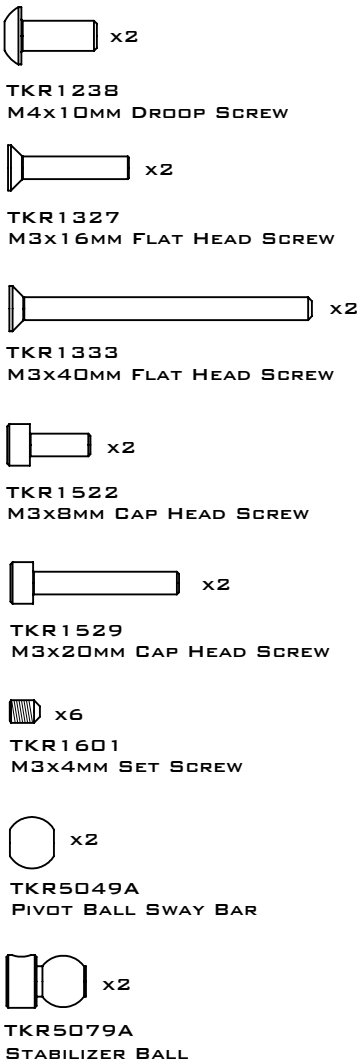

Bag G

Rear Hub/CVA Assembly

Step G-1

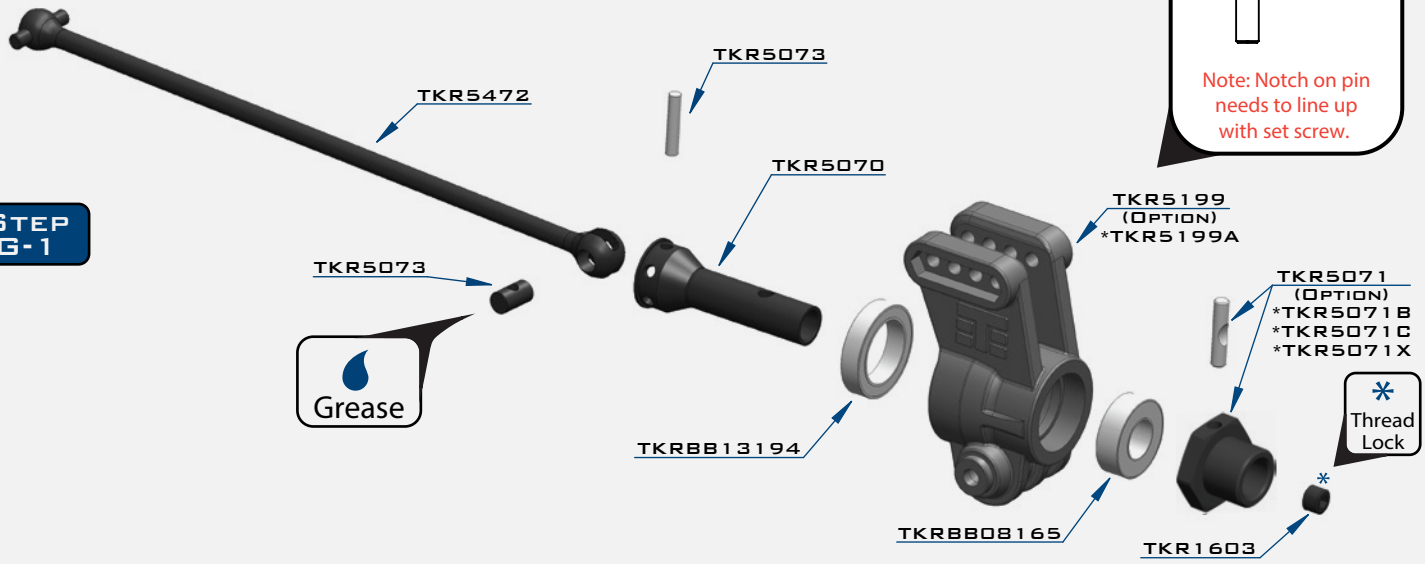

Step G-2

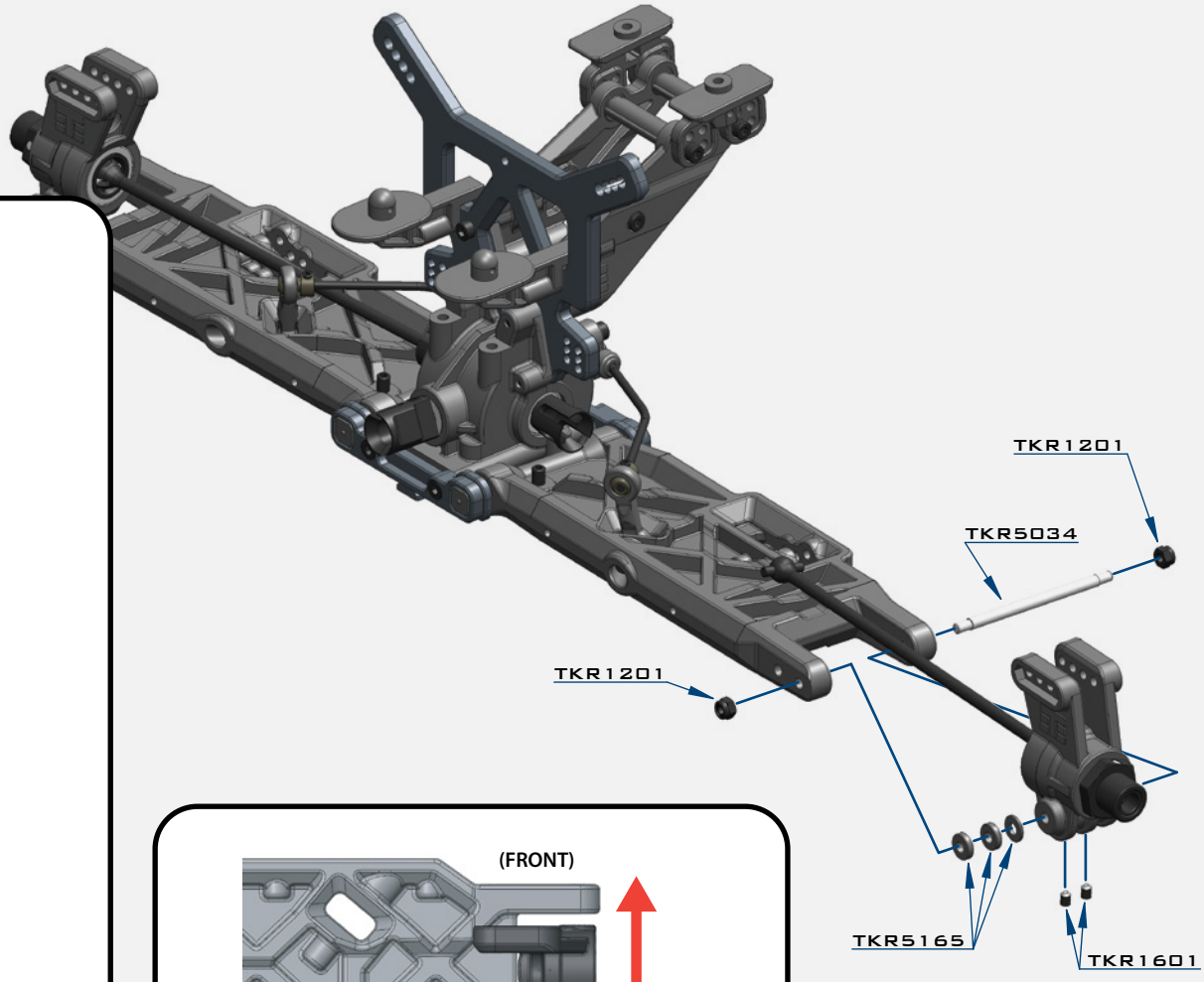

x4
TKR1201
M3 Locknut Black

x4
TKR1601
M3x4mm Set Screw

x2
TKR1603
M5x4mm Set Screw

x2
TKR5071
M3x16.8mm Pin

x2
TKR5073
CV Joint Pin

x2
TKRBB08165
Ball Bearing (8x16x5)

x2
TKRBB13194
Ball Bearing (13x19x4)

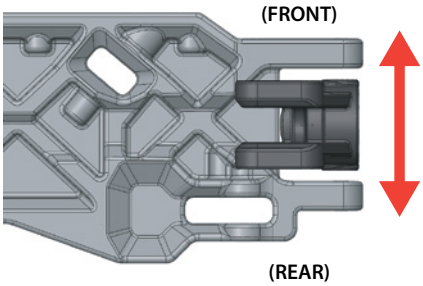

Changes to the wheelbase have a dramatic effect on handling, since it shifts the disribution of weight over the rear wheels. This adjusts traction. By shortening the wheelbase at the rear, you are placing more weight over the rear wheels.

Changes to the wheelbase also change the amount of sweep the rear driveshaft will have. More driveshaft sweep creates an effect similar to anti-squat, where the rear end gets pushed upwards on throttle. This helps reduce chassis slap when landing jumps on throttle.

Bag G

Rear Camber Links

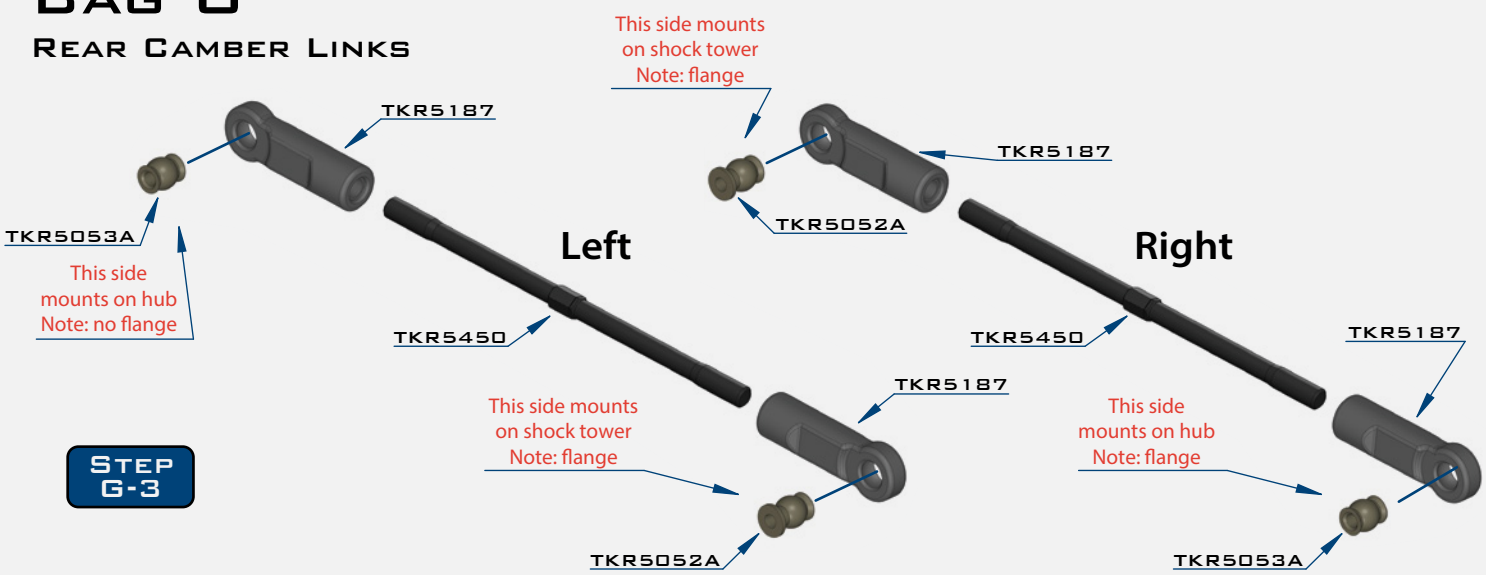

Step G-3

Step G-4

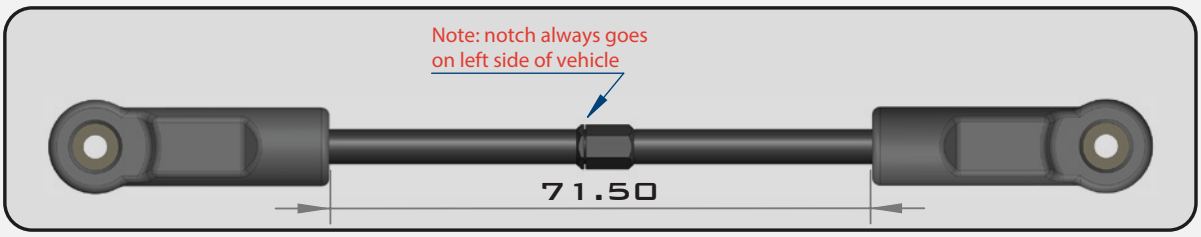

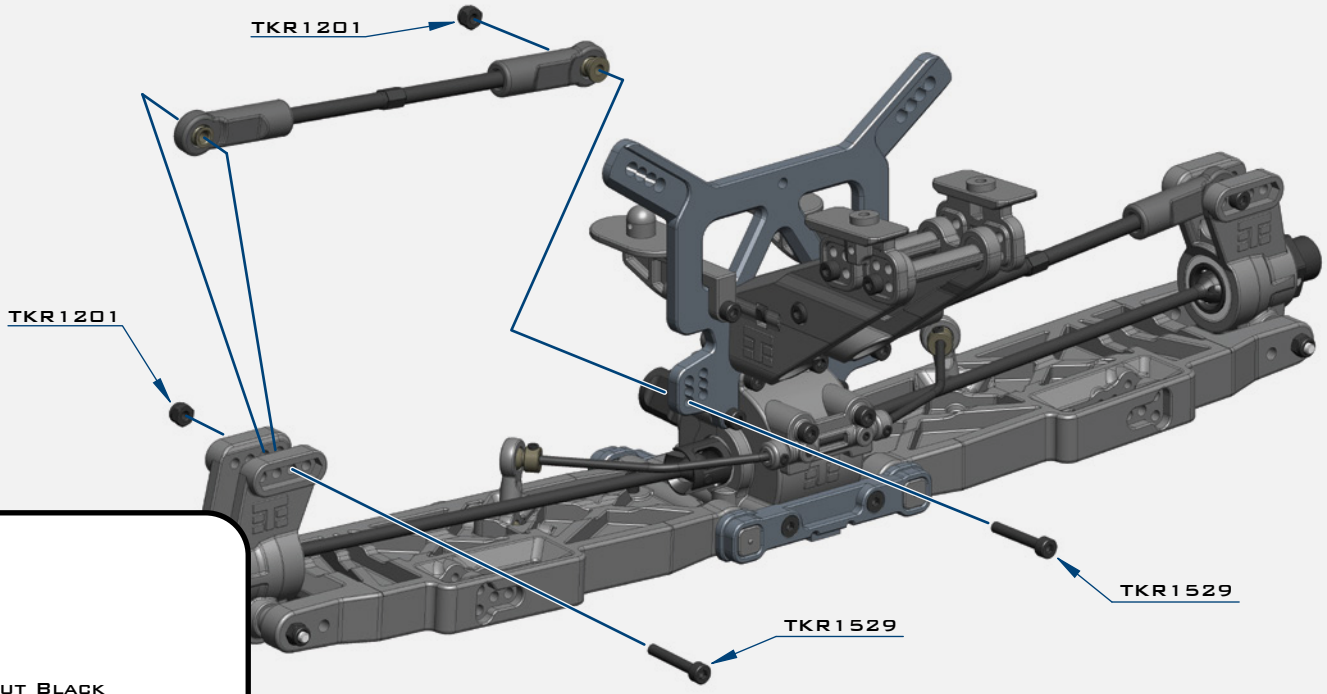

x4

TKR1201
M3 Locknut Black

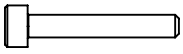

x4

TKR1529
M3x20mm Cap Head Screw

x2

TKR5052A
Pivot Ball M3x6.8mm

x2

TKR5053A
Pivot Ball M3x6.8mm
No Flange

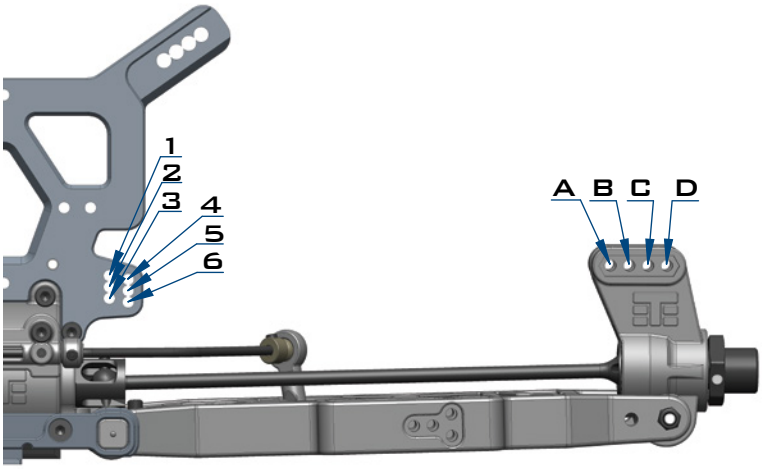

Stock position is 6/B

Bag H

Front End

Step H-1

TKR5482 - 2.5mm
*TKR5480 - 2.3mm
*TKR5481 - 2.4mm
*TKR5483 - 2.6mm
*TKR5484 - 2.8mm
*TKR5485 - 3.0mm
(Option)

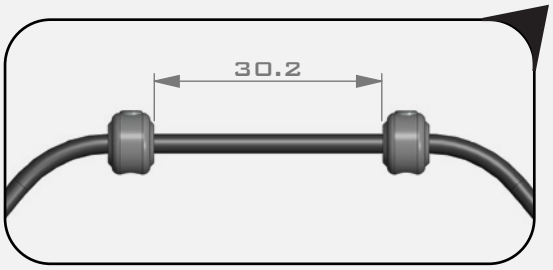

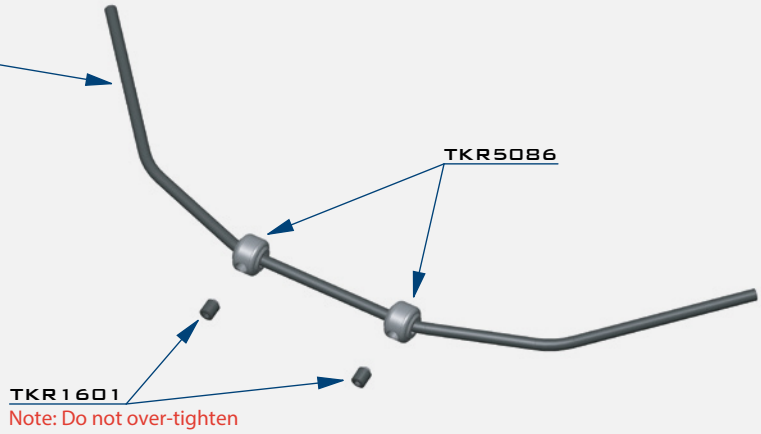

Step H-2

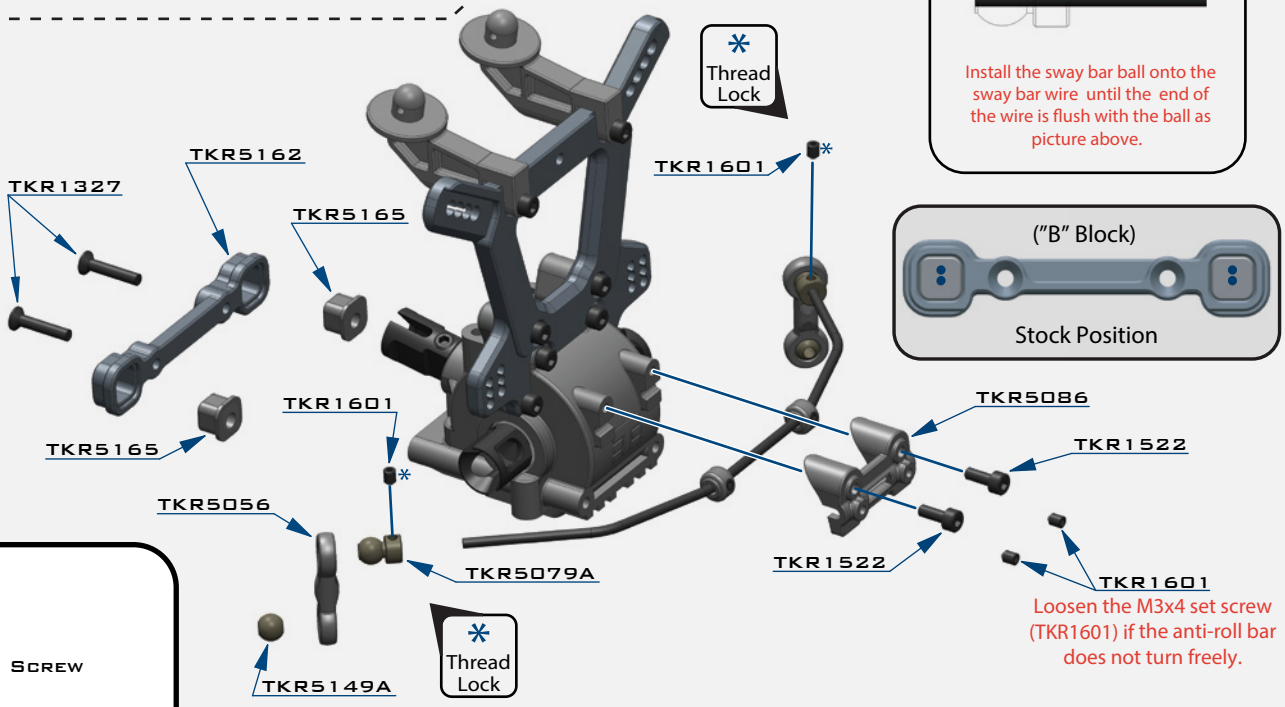

Install the sway bar ball onto the sway bar wire until the end of the wire is flush with the ball as picture above.

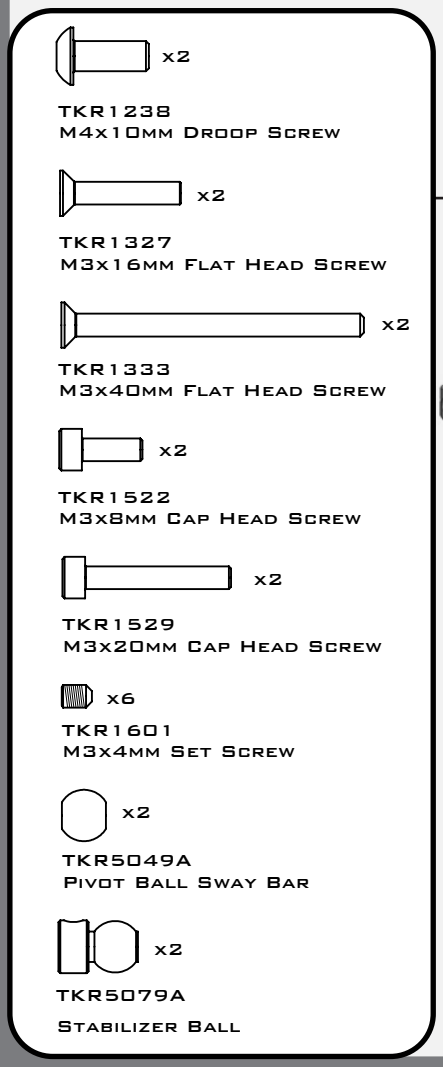

Step H-3

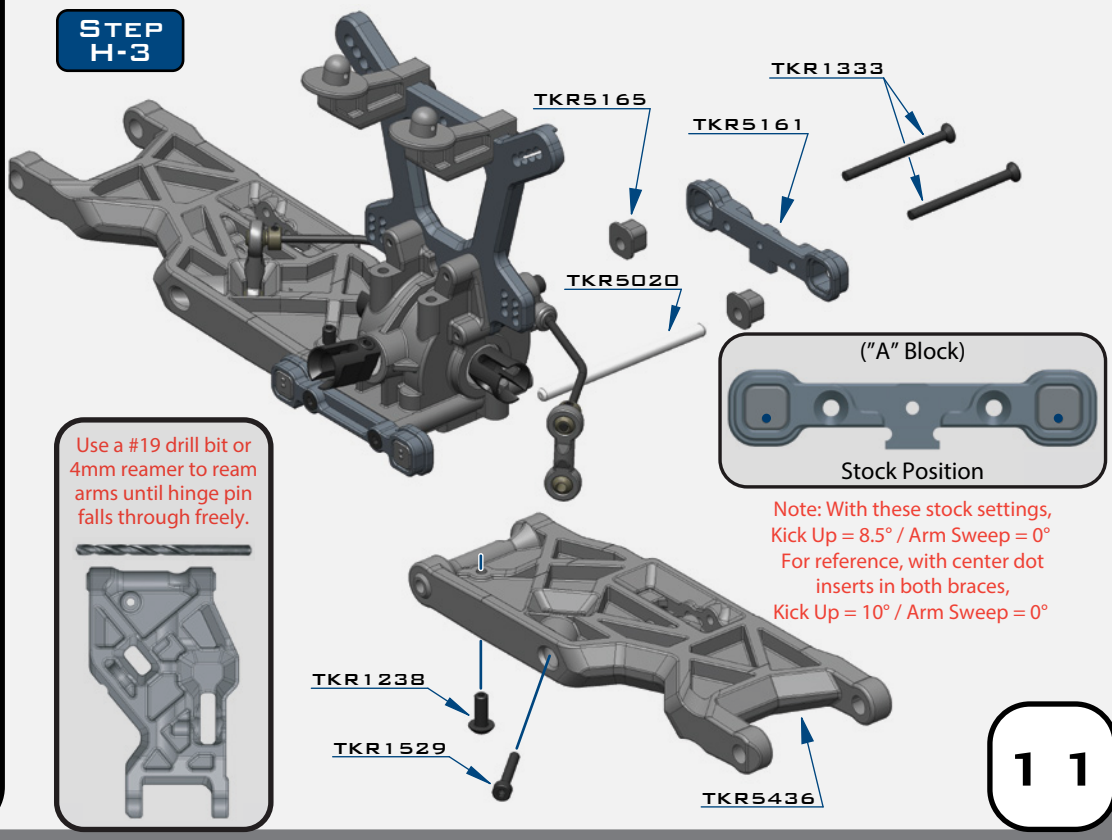

Use a #19 drill bit or 4mm reamer to ream arms until hinge pin falls through freely.

Note: With these stock settings,
Kick Up = 8.5° / Arm Sweep = 0°
For reference, with center dot inserts in both braces,
Kick Up = 10° / Arm Sweep = 0°

Bag 1

Front Spindle / CVA Assembly

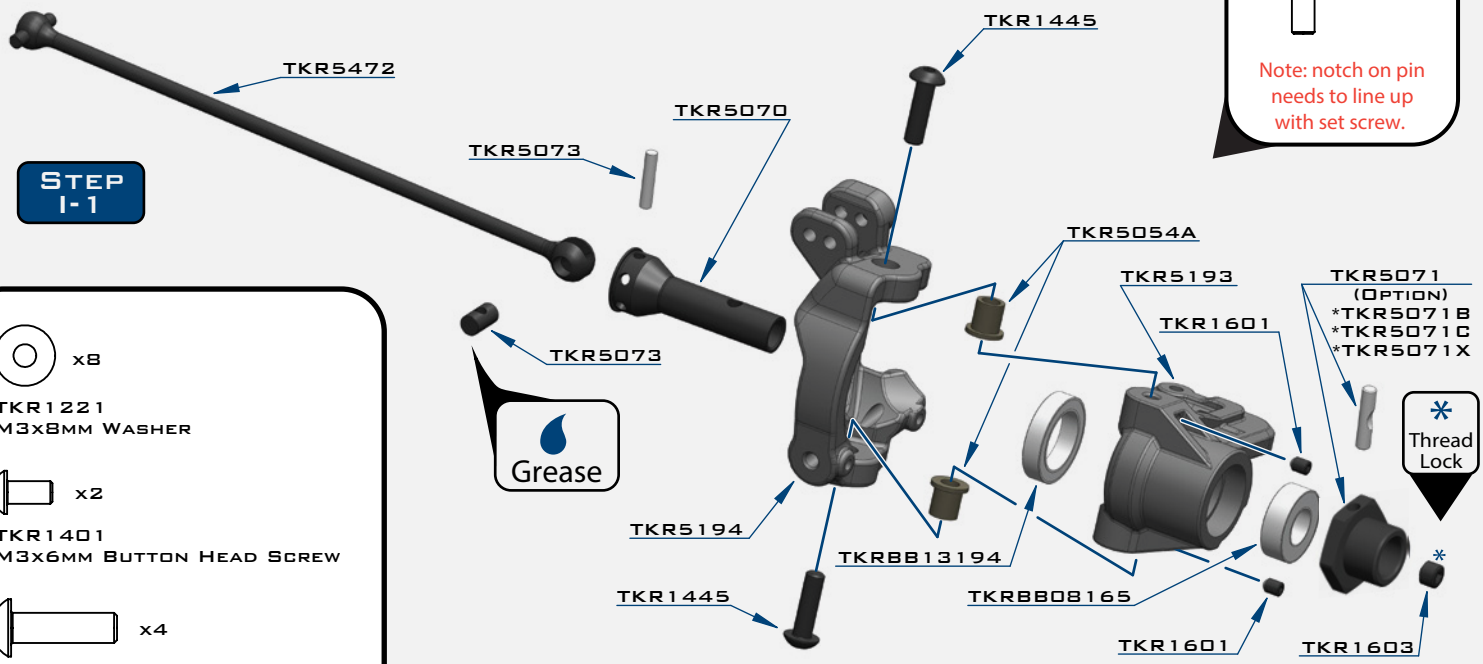

Note: The TKR1601 set screws are meant to keep the TKR1445 screws from coming loose. After installing TKR1445 and ensuring the steering action is free, install TKR1601 in the locations indicated. Very slowly tighten the screws until you feel some resistance from contacting the TKR1445 screws. DO NOT OVERTIGHTEN. Also be sure to loosen TKR1601 before unscrewing TKR1445 or you will damage the screws and the parts.

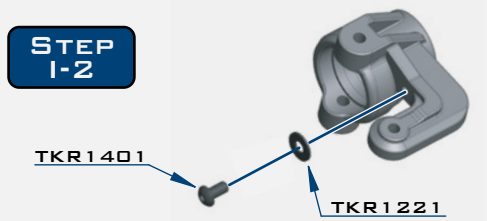

Note: The steering stops provide adjustable travel limiters that you can adjust to your driving style. For very tight tracks you may want to experiment with less limiting washers (more steering travel). However, with too much steering travel the rear end can lose traction more easily coming out of corners. After months of testing on different track surfaces, 1 washer is the best starting point.

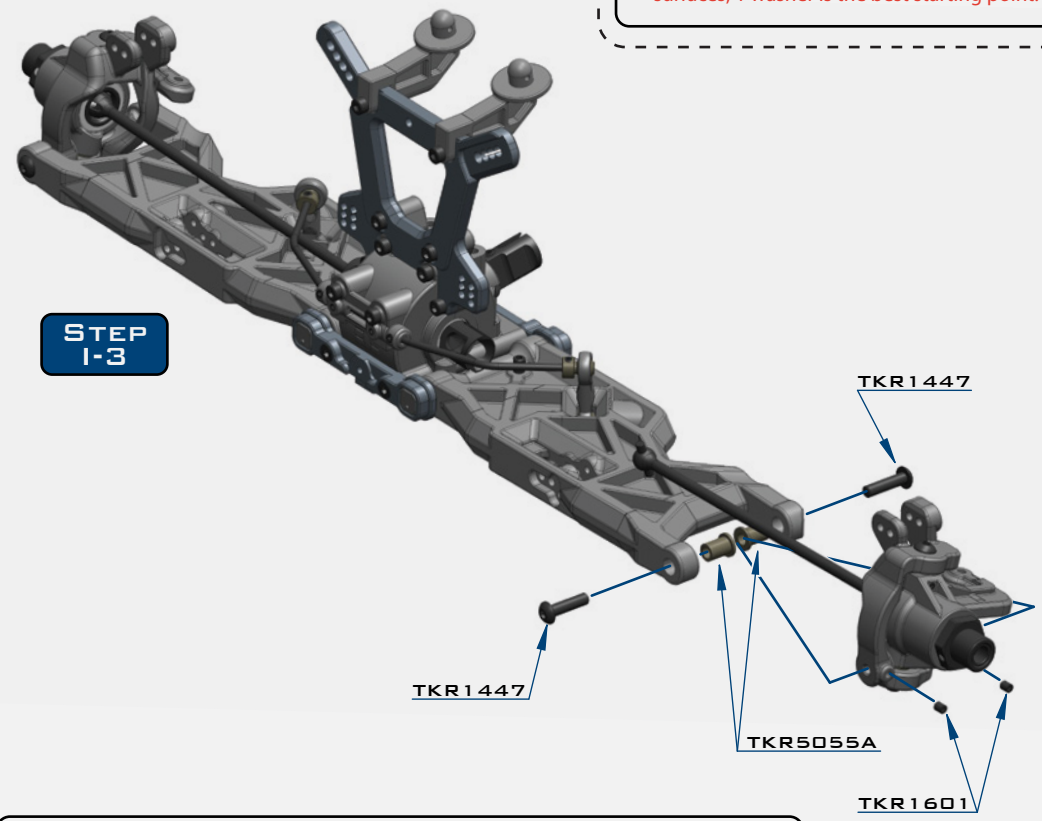

Note: The TKR1601 set screws are meant to keep the TKR1447 screws from coming loose. After installing TKR1447 and ensuring the steering action is free, install TKR1601 in the locations indicated. Very slowly tighten the screws until you feel some resistance from contacting the TKR1447 screws. DO NOT OVERTIGHTEN. Also be sure to loosen TKR1601 before unscrewing TKR1447 or you will damage the screws and the parts.

- x8 — TKR1221 M3x8mm Washer
- x2 — TKR1401 M3x6mm Button Head Screw
- x4 — TKR1445 M4x14mm Button Head Screw
- x4 — TKR1447 M4x16mm Button Head Screw
- x8 — TKR1601 M3x4mm Set Screw
- x2 — TKR1603 M5x4mm Set Screw
- x4 — TKR5054A Spindle Pin Sleeve
- x4 — TKR5055A Suspension Pin Sleeve
- x2 — TKR5071 M3x16.8mm Pin
- x2 — TKR5073 CV Joint Pin
- x2 — TKRBB08165 Ball Bearing (8x16x5)
- x2 — TKRBB13194 Ball Bearing (13x19x4)

Bag 1

Front Camber Links

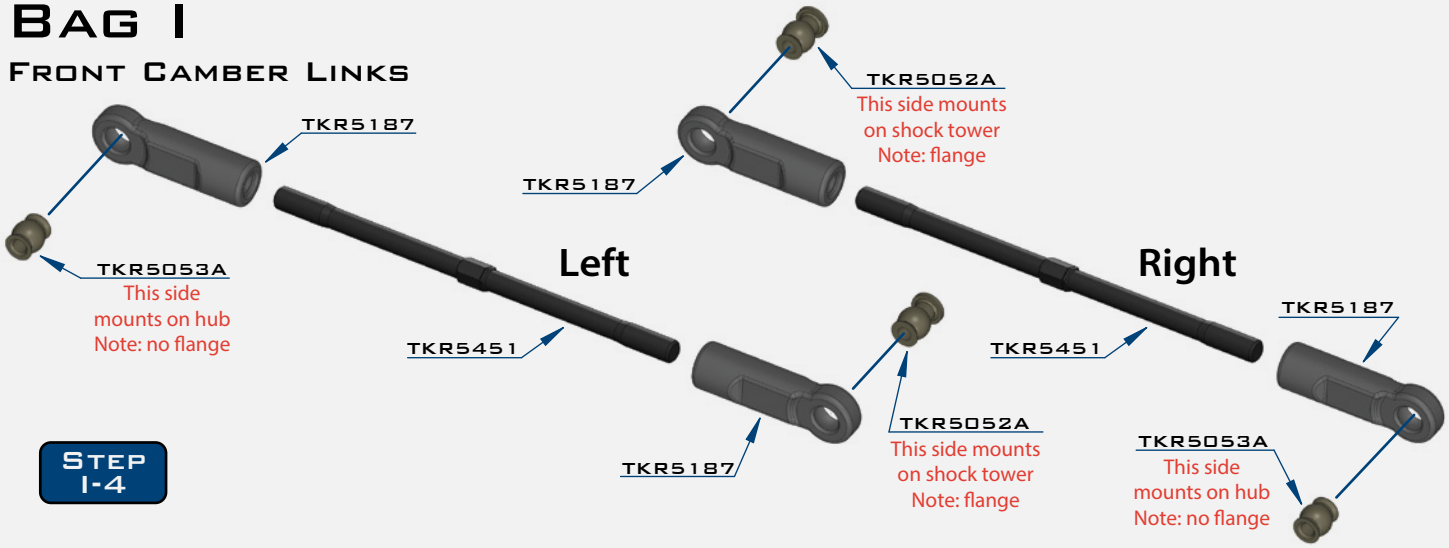

Step 1-4

Step 1-5

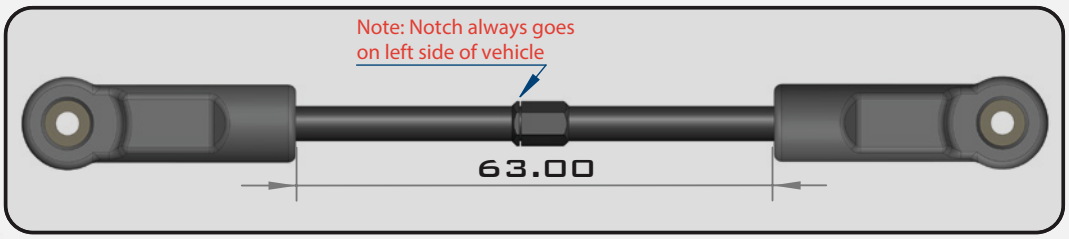

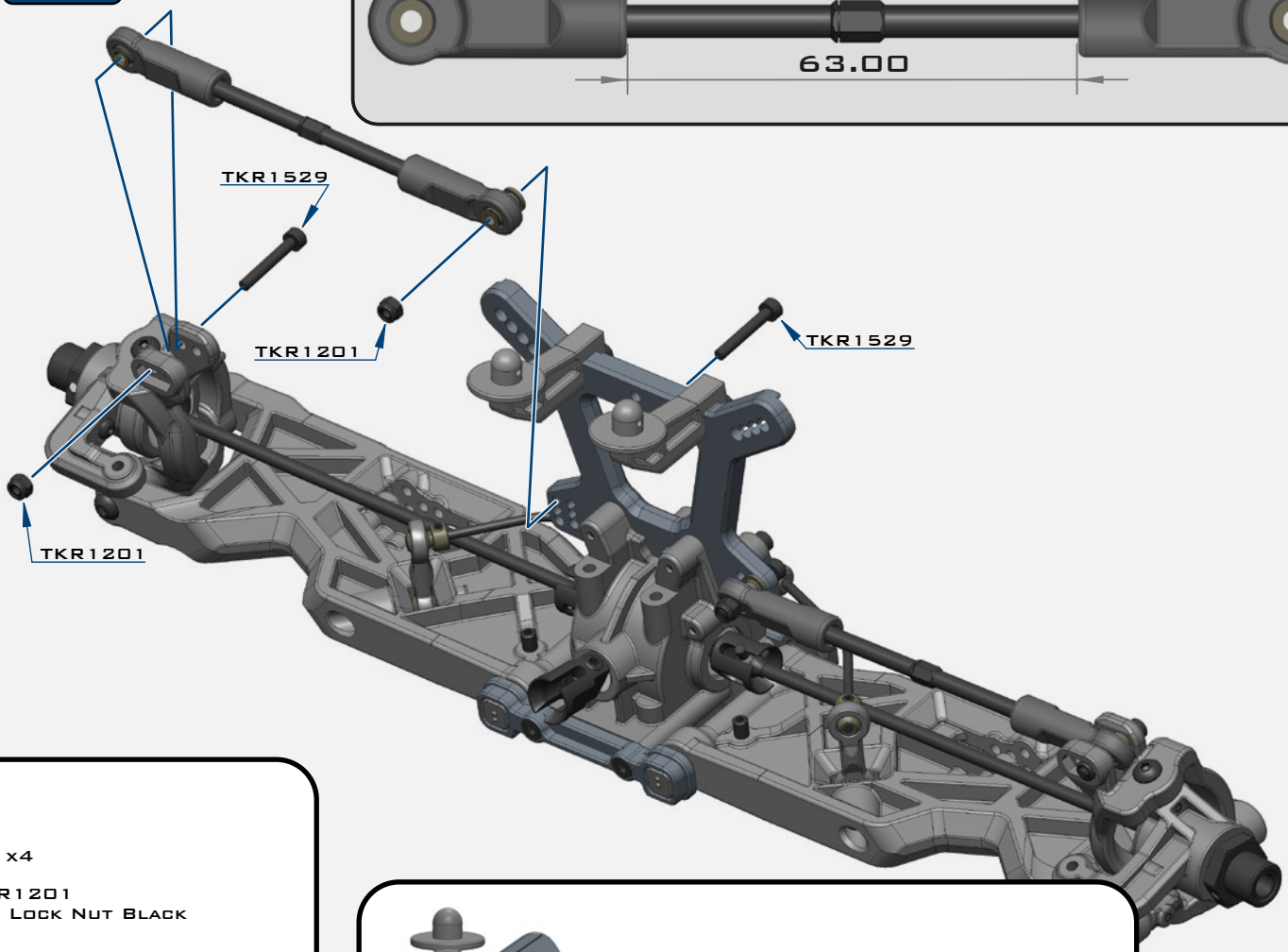


x4

TKR1201
M3 Lock Nut Black

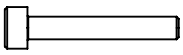
x4

TKR1529
M3x20mm Cap Head Screw


x2

TKR5052A
Pivot Ball M3x6.8mm


x2

TKR5053A
Pivot Ball M3x6.8mm
No Flange

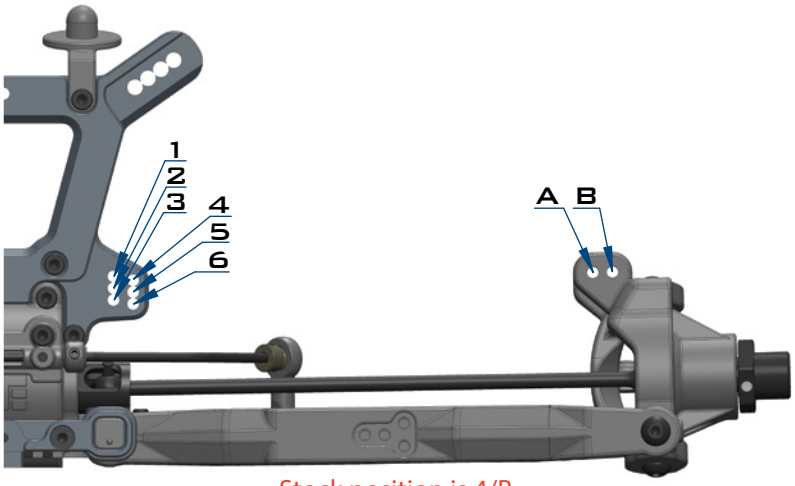

Stock position is 4/B

Bag J

Steering Assembly (overview)

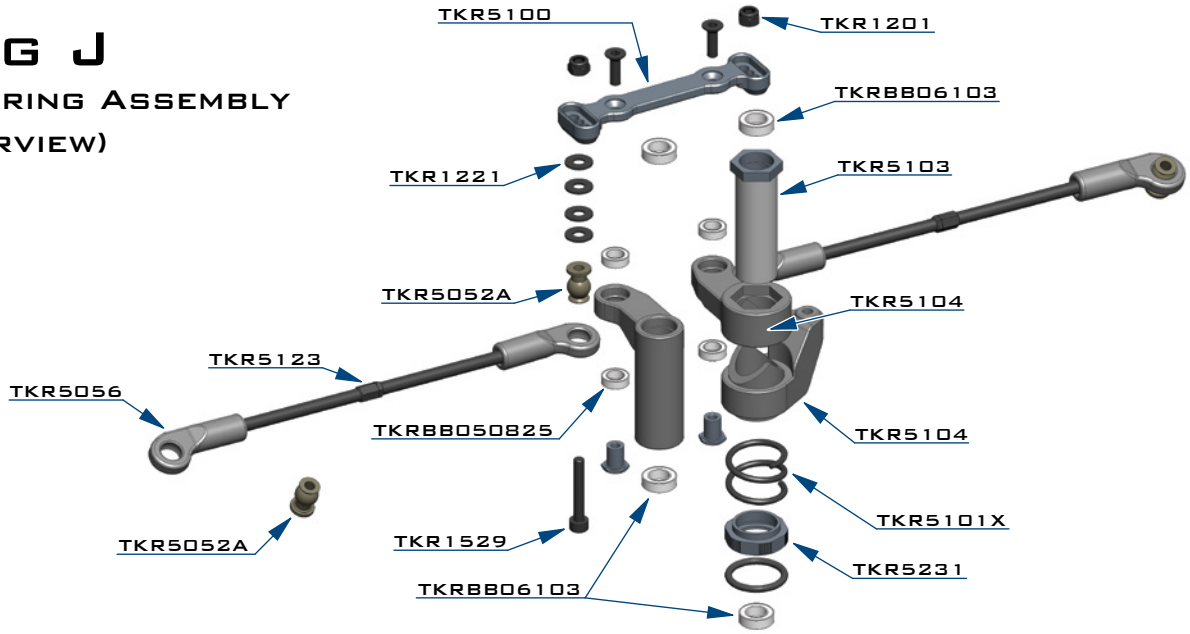

Step J-1

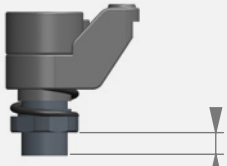

Note: Tighten nut all the way down, then back it off 3 full turns

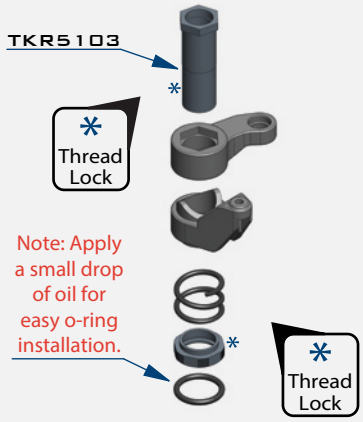

Step J-2

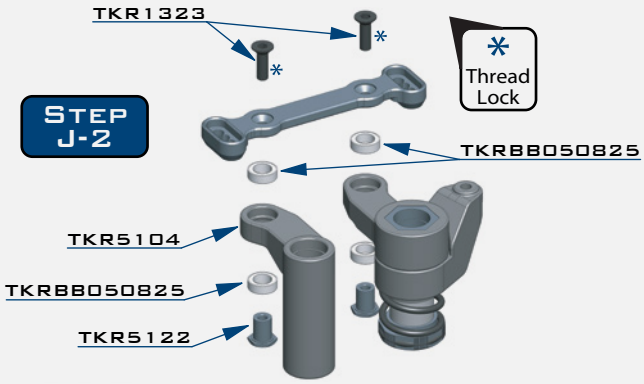

x2
TKR1201
M3 Lock Nut Black

x8
TKR1221
M3x8mm Washer

x2
TKR1323
M3x10mm Flat Head Screw

x2
TKR1529
M3x20mm Cap Head Screw

x4
TKR5052A
Pivot Ball M3x6.8mm

x1
TKR5231
O-ring 16x12x2

x4
TKRBB050825
Ball Bearing (5x8x2.5)

x4
TKRBB06103
Ball Bearing (6x10x3)

Step J-3

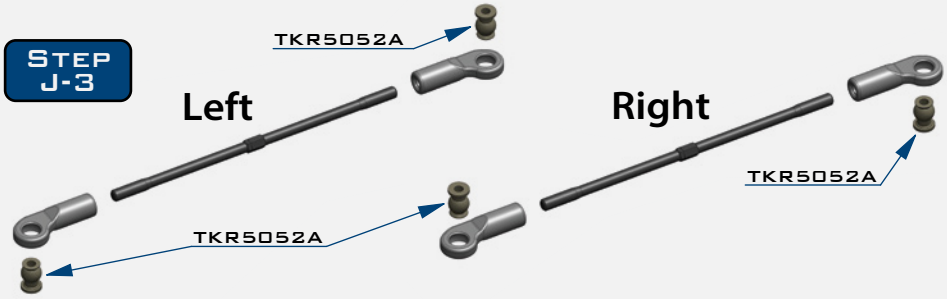

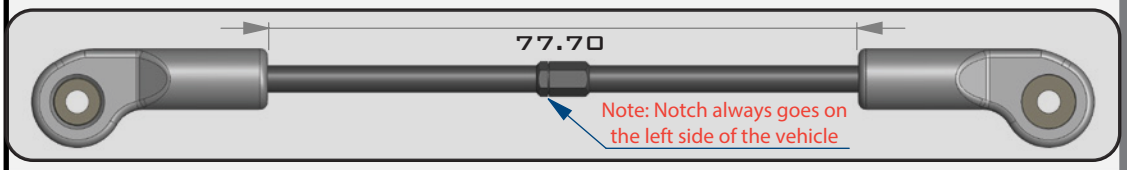

Step J-4

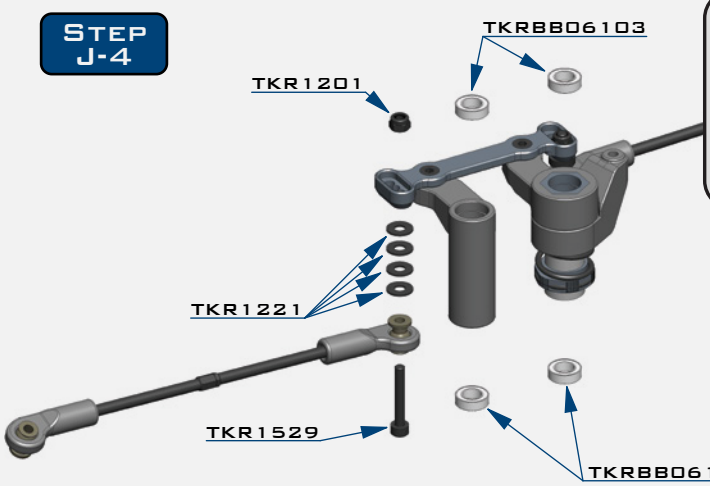

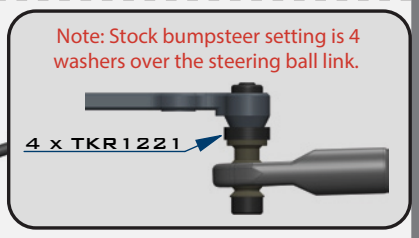

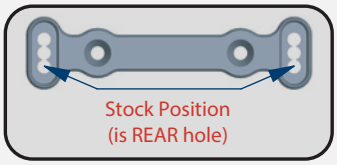

Bag K

Front End Assembly

Step K-1

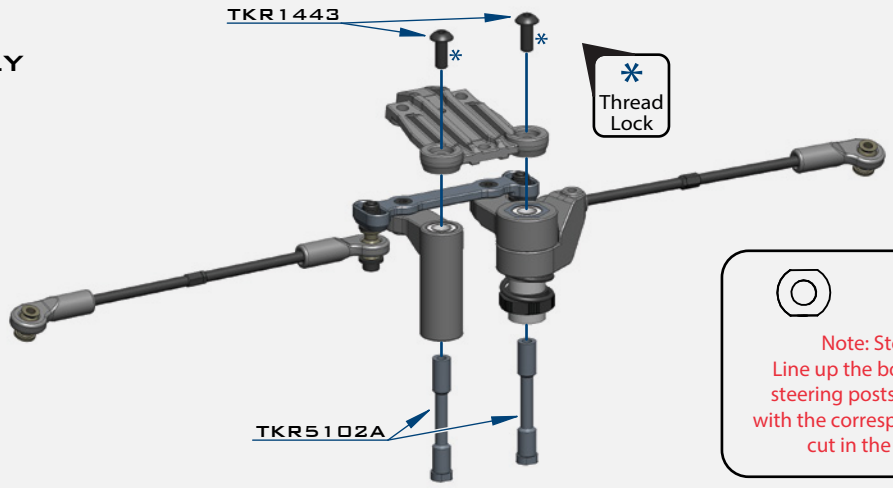

Note: Step K-1:
Line up the bottom of the steering posts (TKR5102A) with the corresponding recess cut in the chassis.

Step K-2

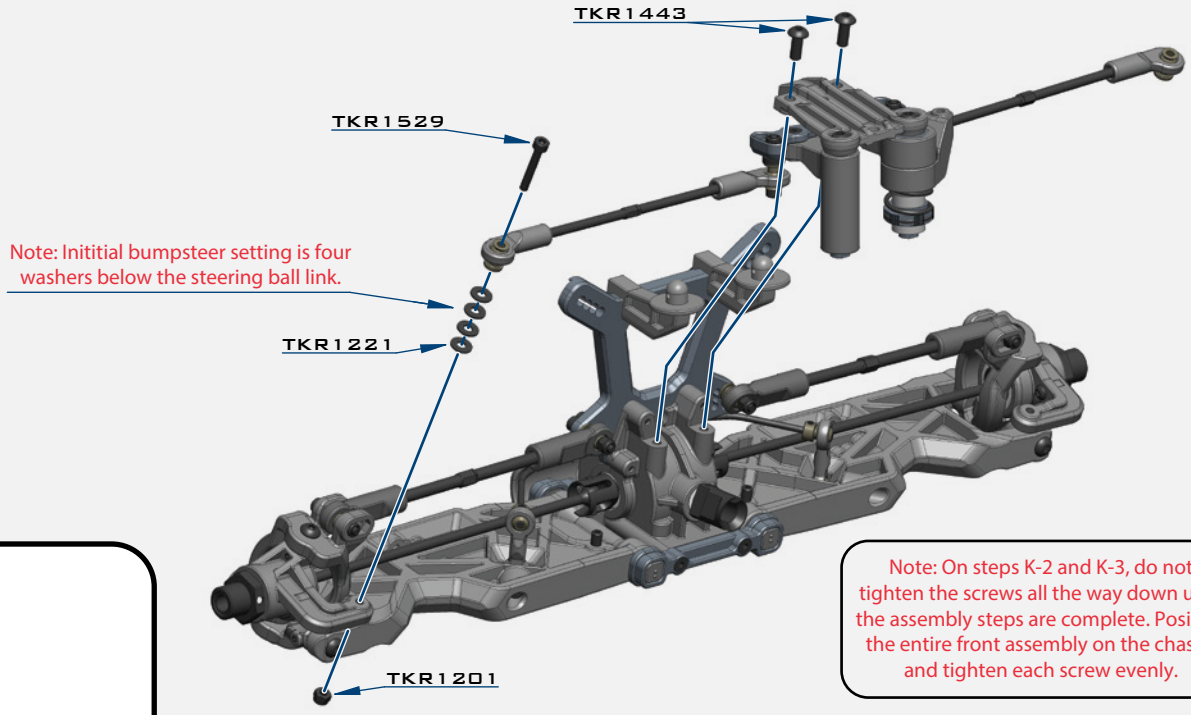

Note: On steps K-2 and K-3, do not tighten the screws all the way down until the assembly steps are complete. Position the entire front assembly on the chassis and tighten each screw evenly.

Step K-3

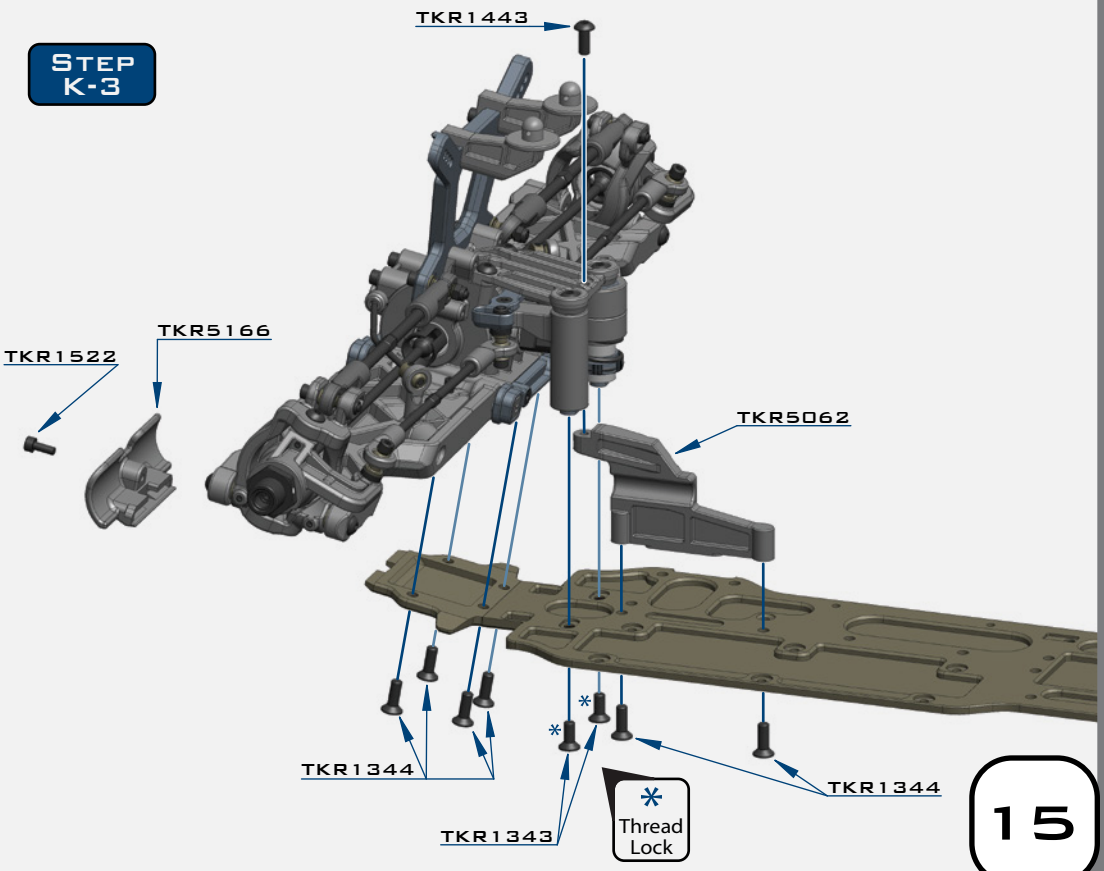

x2
TKR1201
M3 Lock Nut Black

x8
TKR1221
M3x8mm Washer

x2
TKR1343
M4x10mm Flat Head Screw

x6
TKR1344
M4x12mm Flat Head Screw

x5
TKR1443
M4x10mm Button Head Screw

x1
TKR1522
M3x8mm Cap Head Screw

x2
TKR1529
M3x20mm Cap Head Screw

Bag L

Center/Rear Assembly

Step L-1

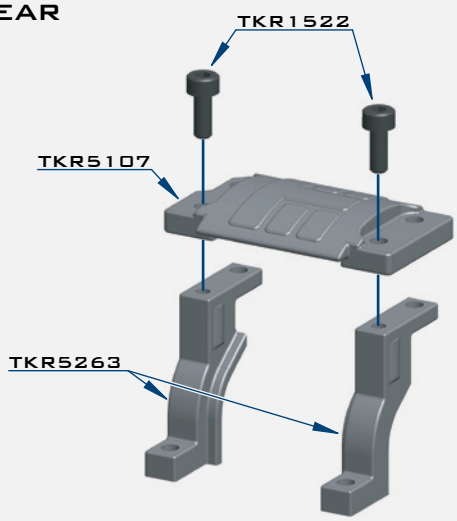

Step L-2

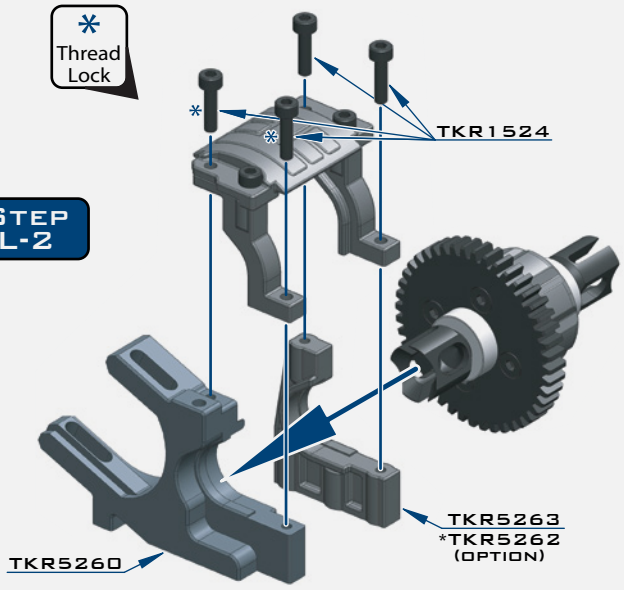

Step L-3

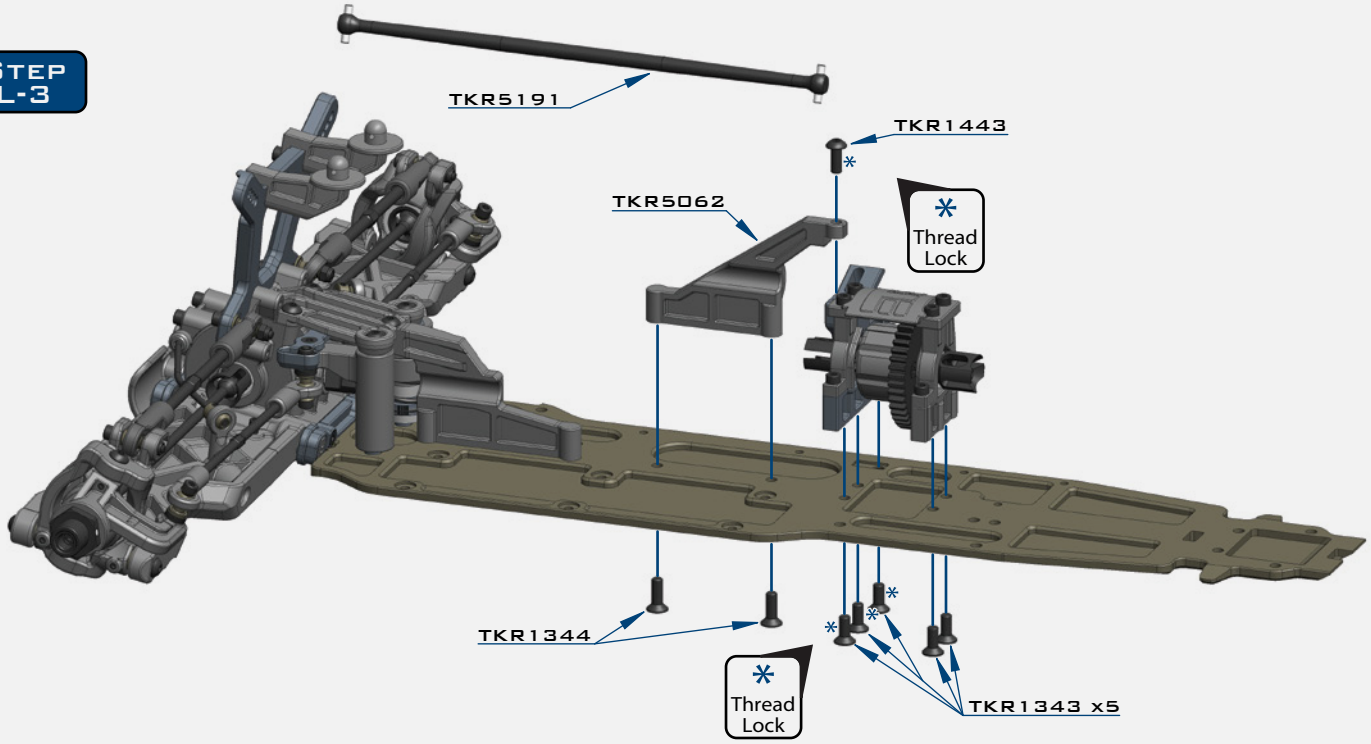

x5

TKR1343
M4x10mm Flat Head Screw

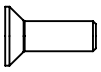

x8

TKR1344
M4x12mm Flat Head Screw

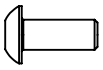

x2

TKR1443
M4x10mm Button Head Screw

x2

TKR1522
M3x8mm Cap Head Screw

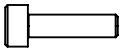

x4

TKR1524
M3x12mm Cap Head Screw

Step L-4

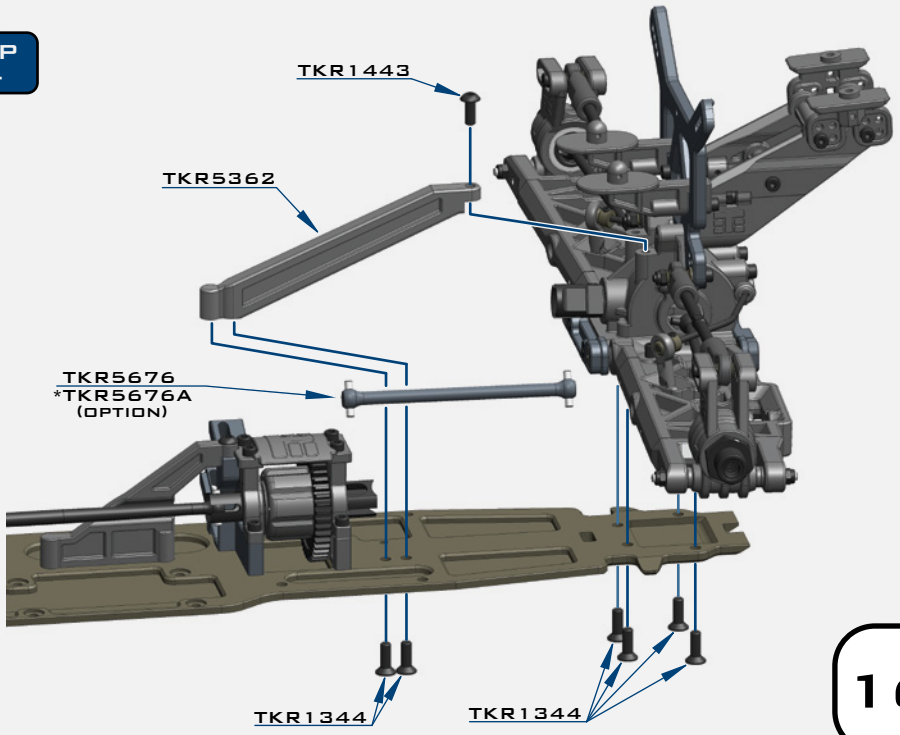

Shock Filling Instructions

For both front and rear shocks

The following steps and information will provide you with the best way to fill and bleed your shocks. After thorough testing, we've found it's easiest to complete steps 1 through 3 on each shock before moving onto step 4. By the time you've finished step 3 on the last shock the first one will be ready for step 4.

Standard or Vented Cap Build:

Step 1: Extend the shock shaft all the way down. Fill the shock with oil until the it is about 90% full.
Step 2: Slowly pump the shock shaft up and down 3-5 times to release air bubbles from underneath the piston.
Step 3: Let the shock rest vertically with the shock shaft fully extended for five minutes or until all the air bubbles have released.
Step 4: Next you will top off the shock with oil, to about 1-2mm below the top edge.
(If you do overfill the shock, it won't hurt performance, it will just spill out and make a little bit of a mess. If you underfill the shock, it will cause air to be trapped inside.)
Step 5: Place the bladder *INSIDE* the shock cap and put a few drops of oil on the bladder.
Step 6: Put a paper towel down below the build to catch drips and have another ready to wipe off excess oil. Place the cap on the shock and screw down about half way. Lay the shock over about 45 degrees with the bleeder hole facing up.

Step 6A: (Standard non-vented "Stock") Push the shaft in for the amount of rebound desired.
Step 6B: (Vented) Push the shaft in until about 15mm of shaft is showing.

- Make sure that you match the rebound amount between the left and right shocks.
- Oil should be oozing out of the bleeder hole.

Step 7: Hold the cap firmly in place with the bleeder hole facing up and turn the shock body until hand tight. The shock will continue to ooze oil.
Step 8: Fully tighten down each shock with shock tools until cap is secure and wipe excess oil away.

Emulsion Build:

Prep your shock caps TKR6018 (optional for ET48) accordingly by drilling out the large angled bleeder hole in the top of the cap. Place the larger thin o-ring around the base of the threads where the shock cap screws on (see diagram on the next page). This seal is crucial to the build.

Follow steps 1-4 above.

Step 5: Rebound is more of a natural side effect of an emulsion shock. It's not something that can be set accurately because you run the risk of hydrolocking the shock if you do not push the shaft all the way in when you bleed it. For now leave the shaft fully extended.
Step 6: Fill the shock up, over filling just slightly without spilling to create a small dome of oil.
Step 7: Place a little bit of oil in the shock cap and quickly put the shock cap on the shock body. Tighten the cap all the way down. Very slowly push the shaft in. Oil will start to bleed out of the top of the cap. While wiping away excess oil, continue to slowly push the shaft in *ALL THE WAY*.
If no oil comes out when the shaft is fully inserted, you will need to start over at step 6.
Step 8: Install the TKR1341 M4x6mm flat head screw and TKR5125 black o-ring to seal the cap (see diagram). Tighten until o-ring is fully seated.

Bag M

Front Shock Assembly

Step M-1

Note: Make sure to tighten both cartridge cap (TKR6015) and shock cap (TKR6003B) to ensure a proper seal. Tools may be required.

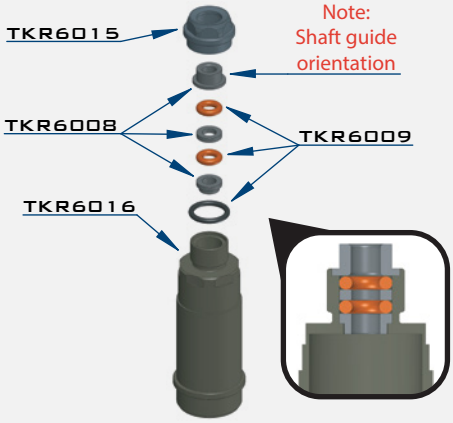

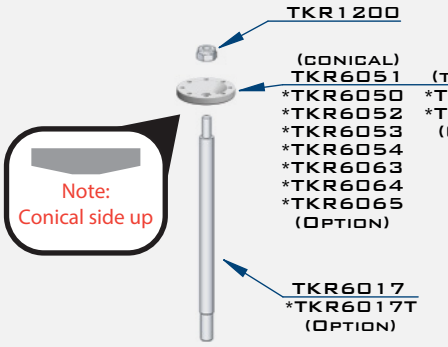

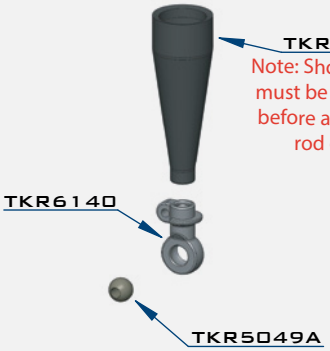

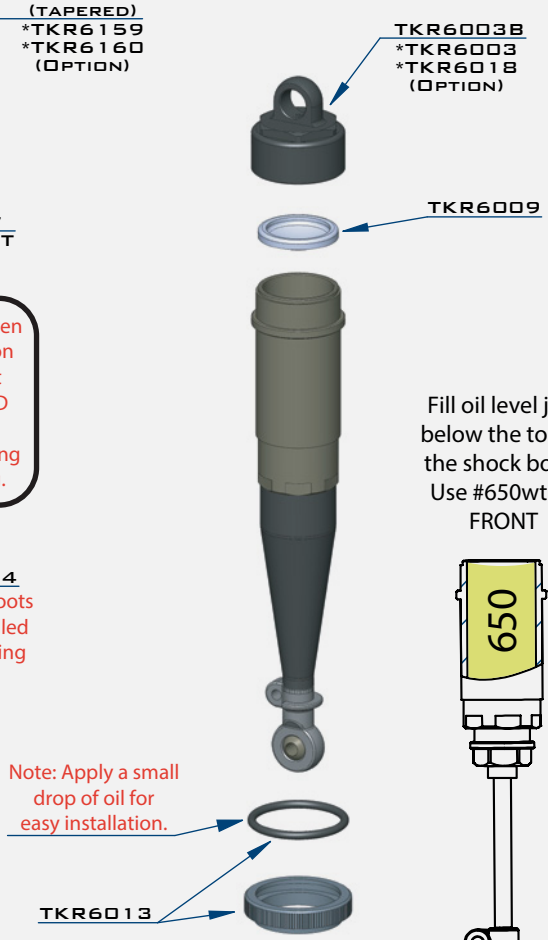

Fill oil level just below the top of the shock body. Use #650wt oil

FRONT

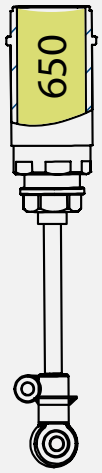

Note: Front shocks use shorter shock bodies - TKR6016, shorter shock shafts - TKR6017, shorter springs - TKR6091 and shorter shock boots - TKR6144

Step M-2

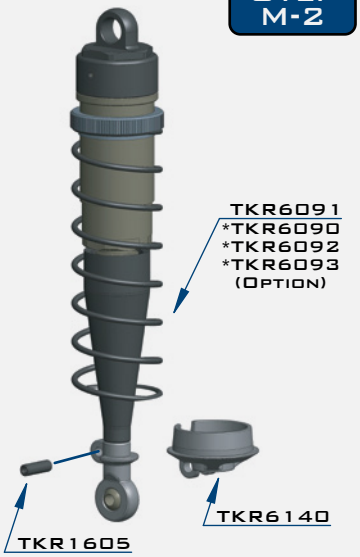

x2
TKR1200
M2.5 Lock Nut Zinc

x2
TKR1202
M4 Lock Nut Black

x2
TKR1211
M3 Lock Nut Flange Black

x2
TKR1529
M3x20mm Cap Head Screw

x2
TKR1605
M3x10mm Set Screw

Step M-3

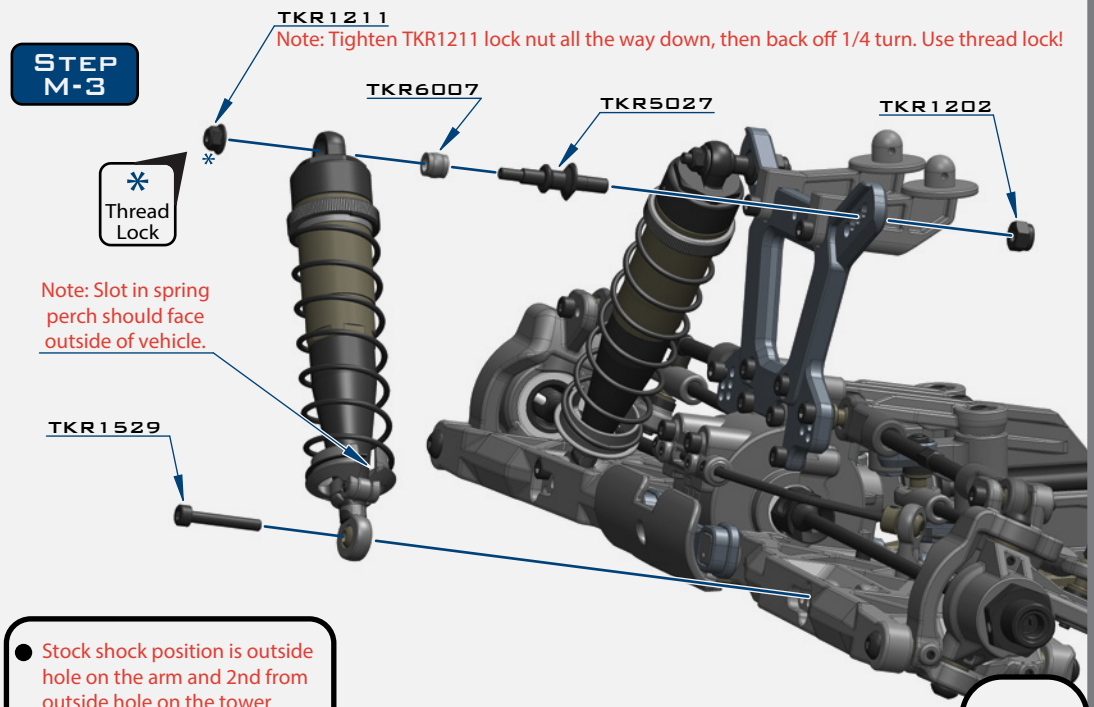

- Stock shock position is outside hole on the arm and 2nd from outside hole on the tower
- Stock front ride height 37mm
- Shock length (droop) 122mm

Bag N

Rear Shock Assembly

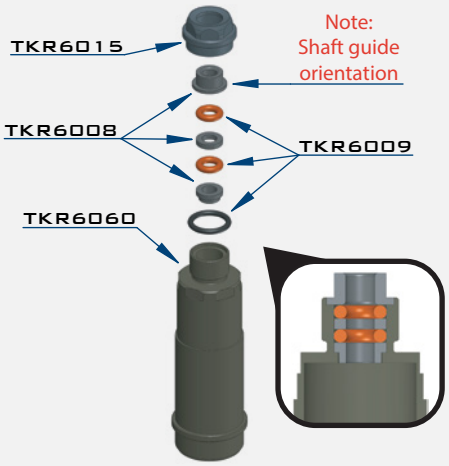

Step N-1

Note: Make sure to tighten both cartridge cap (TKR6015) and shock cap (TKR6003B) to ensure a proper seal. Tools may be required.

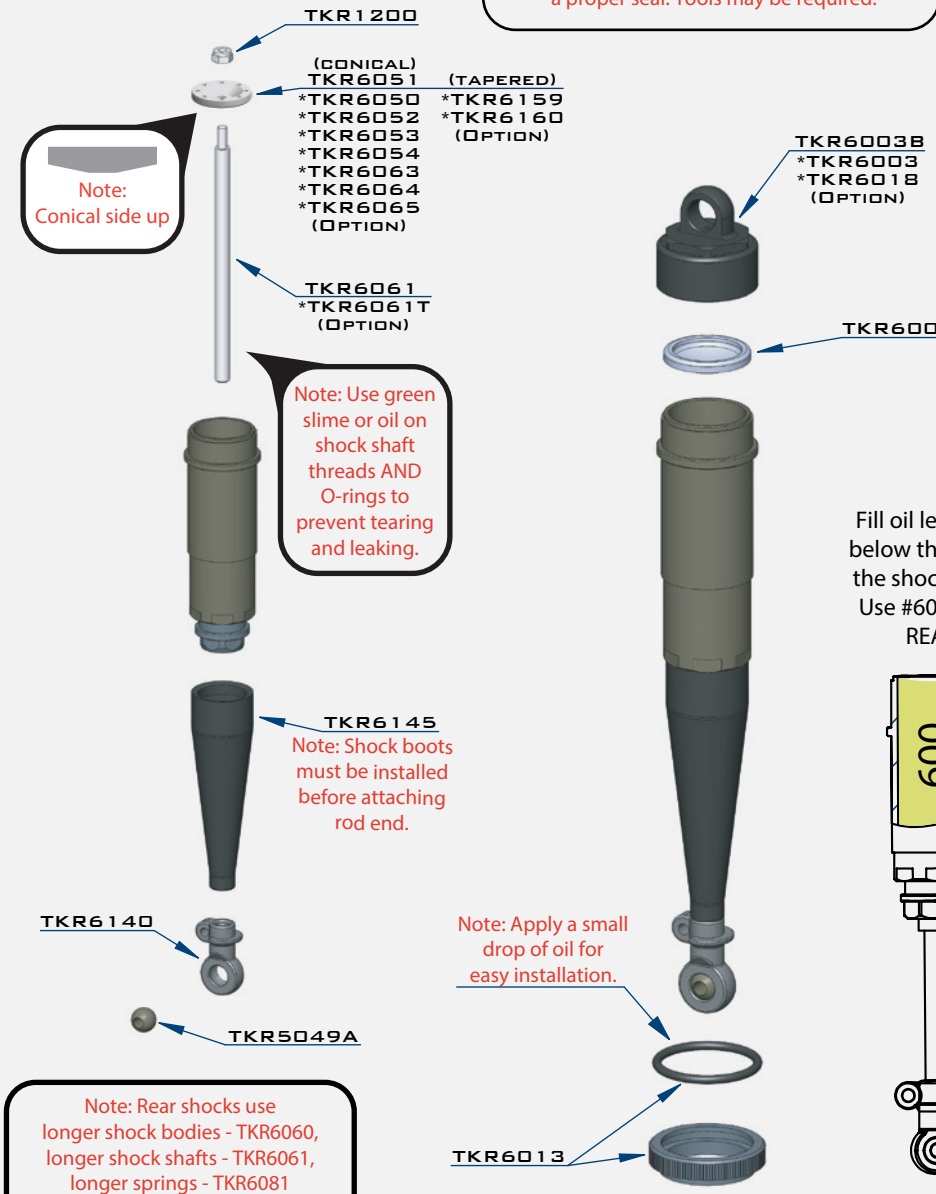

Note: Rear shocks use longer shock bodies - TKR6060, longer shock shafts - TKR6061, longer springs - TKR6081 and longer shock boots - TKR6145

Step N-2

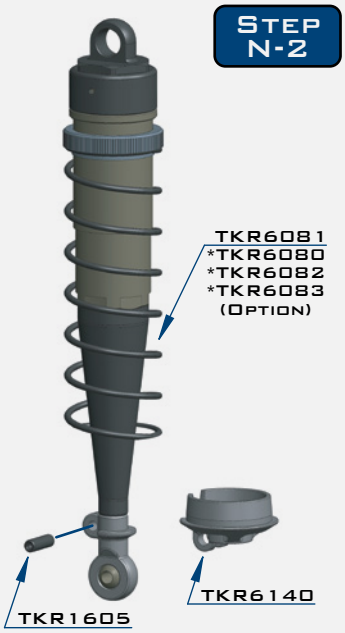

x2
TKR1200
M2.5 Lock Nut Zinc

x2
TKR1202
M4 Lock Nut Black

x2
TKR1211
M3 Lock Nut Flange Black

x2
TKR1529
M3x20mm Cap Head Screw

x2
TKR1605
M3x10mm Set Screw

Step N-3

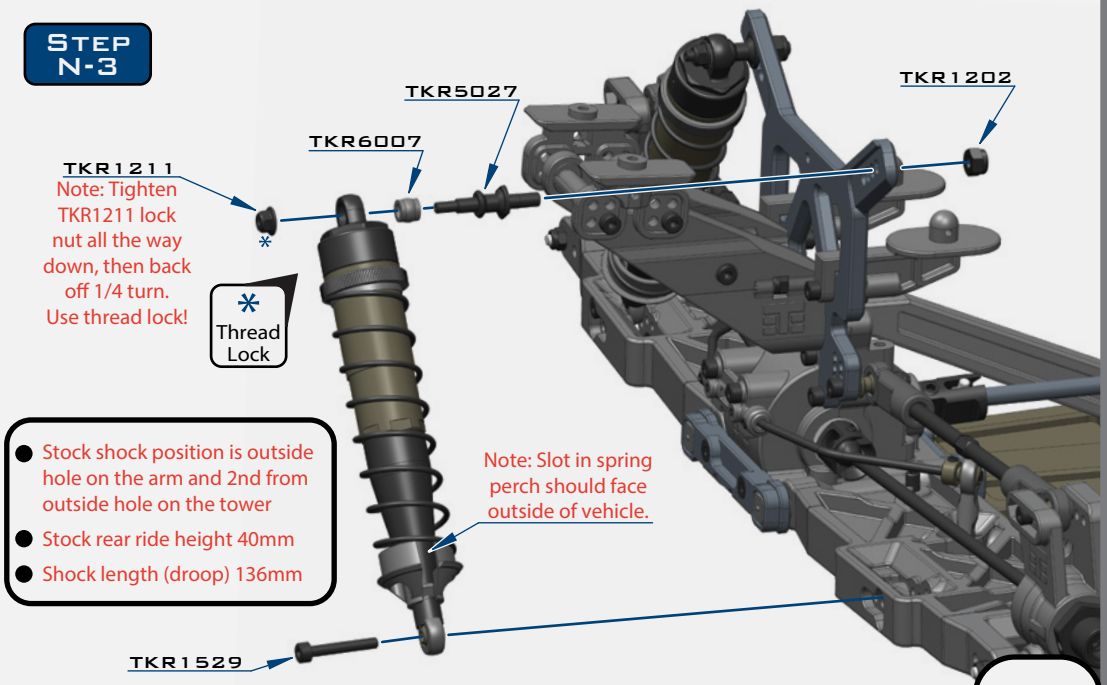

- Stock shock position is outside hole on the arm and 2nd from outside hole on the tower
- Stock rear ride height 40mm
- Shock length (droop) 136mm

Bag 0

Final Assembly

Step 0-1

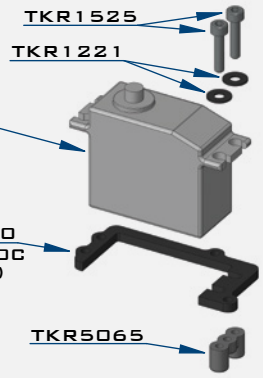

Step 0-2

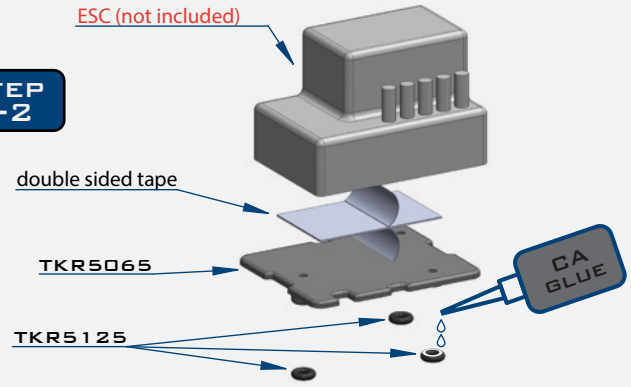

Note: CA glue 3 black o-rings (TKR5125) to the bottom legs of the ESC tray.

Step 0-3

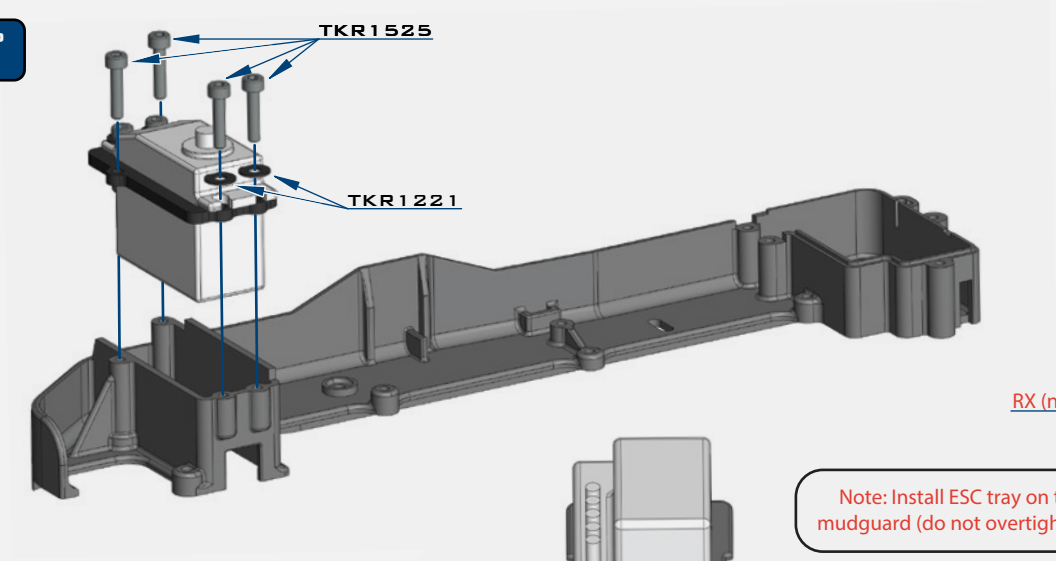

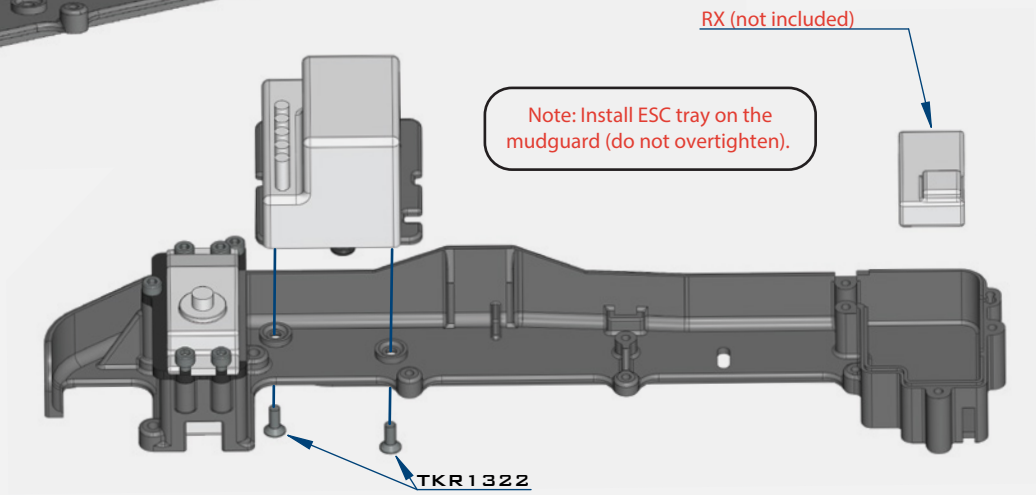

Note: Install ESC tray on the mudguard (do not overtighten).

Step 0-4

Note: Feed the servo wire underneath the esc tray in between the mounting screws on the mud guard, then feed both ESC and servo wires into the RX box as shown. Install wire retainers (TKR5065) to secure them properly.

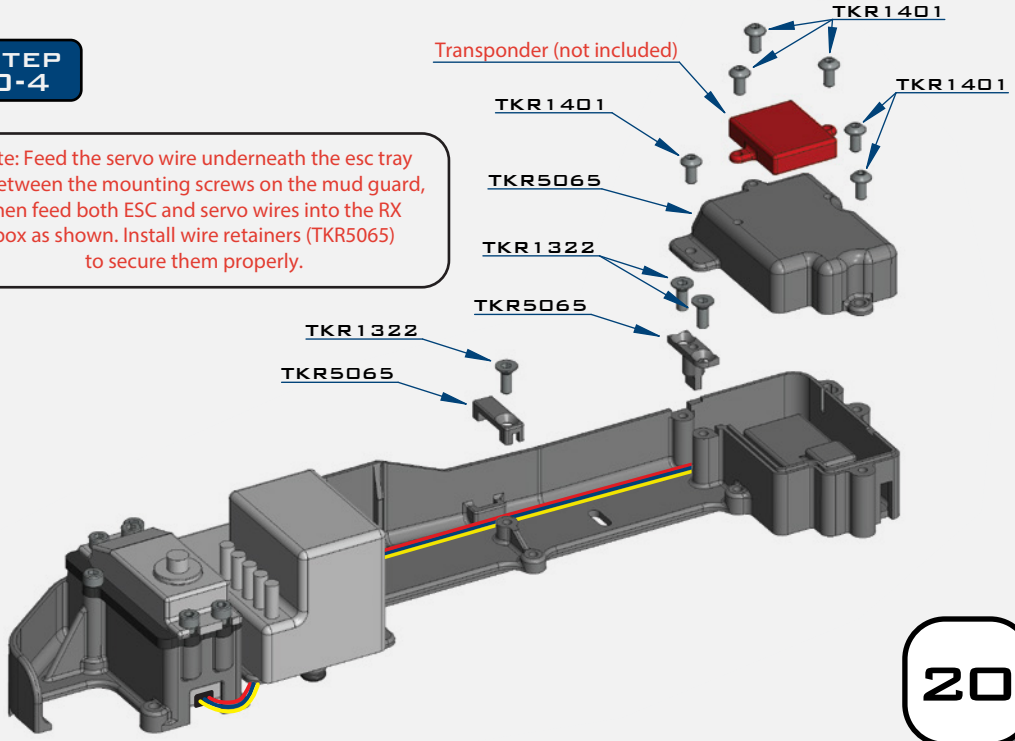

x4
TKR1221
M3X8mm Washer

x5
TKR1322
M3x8mm Flat Head Screw

x6
TKR1401
M3x6mm Button Head Screw

x6
TKR1525
M3x14mm Cap Head Screw

x3
TKR5125
O-ring 3x7mm

Bag P

Final Assembly

Step P-1

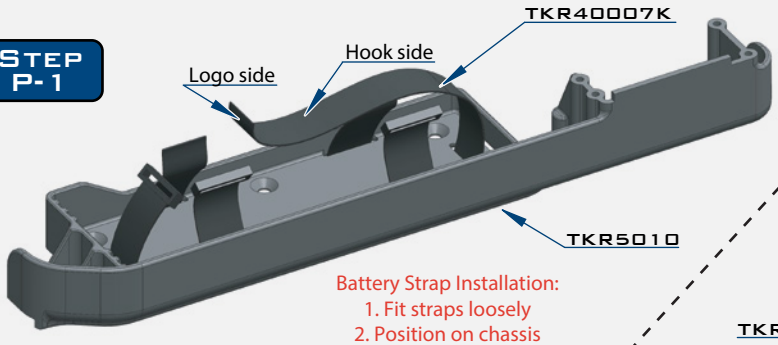

Battery Strap Installation:
1. Fit straps loosely
2. Position on chassis
3. Proceed to step P-2

Step P-2

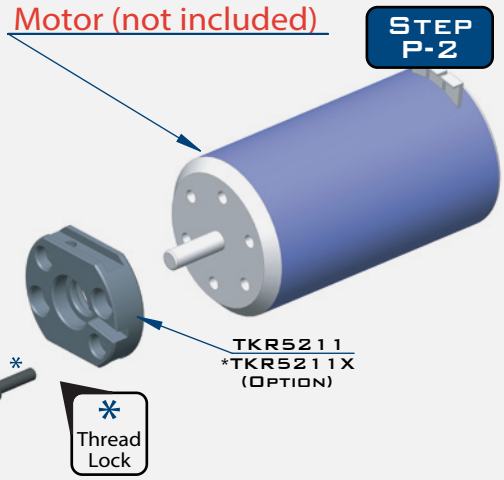

Step P-3

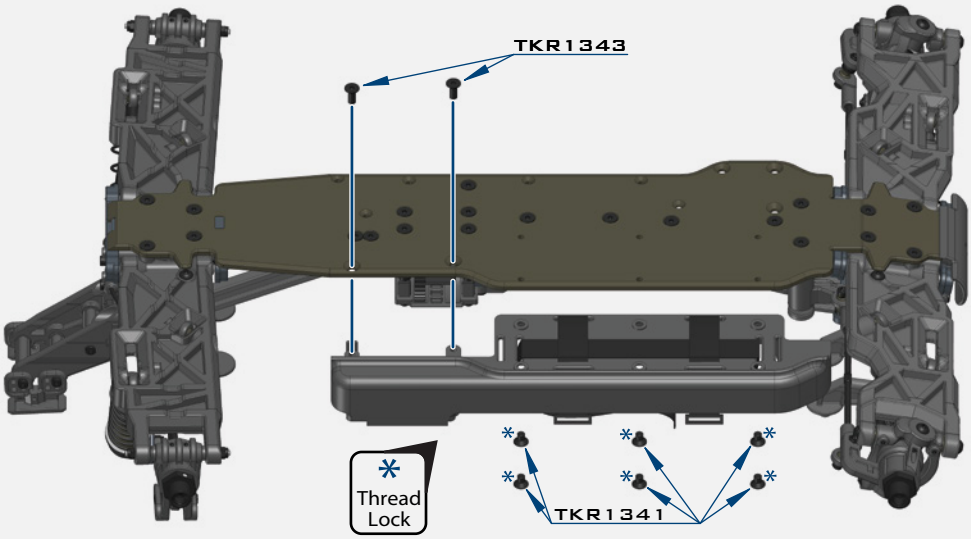

Step P-4

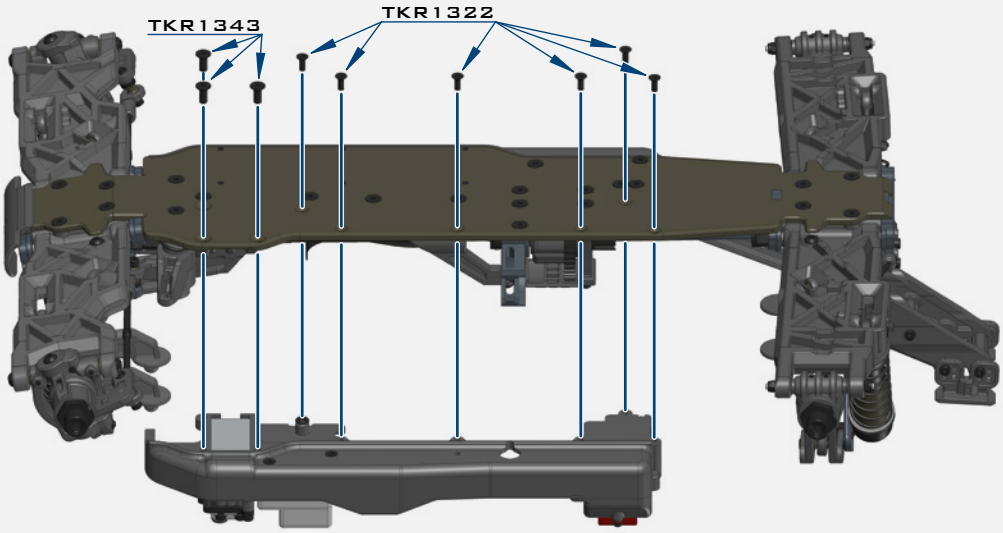

Step P-5

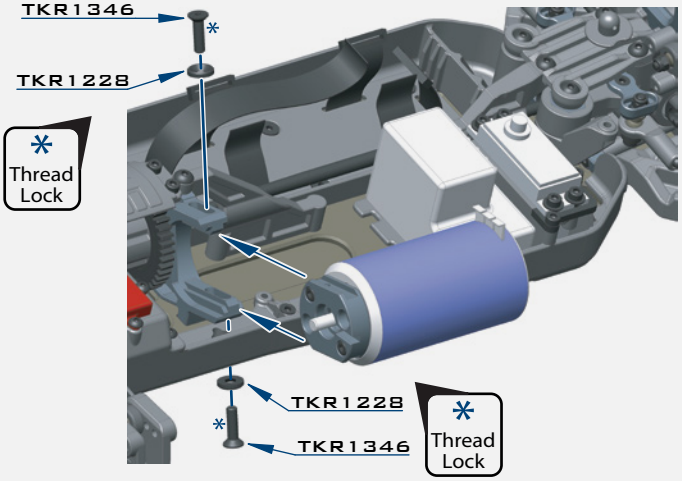

Note: Install MOD1 pinion (TKR4171-4190) at this step. Adjust gear mesh and tighten screws (TKR1346) well. *Use thread lock.

x2	TKR1228 M4 Countersunk Washer
x6	TKR1322 M3x8mm Flat Head Screw
x6	TKR1341 M4x6mm Flat Head Screw
x5	TKR1343 M4x10mm Flat Head Screw
x2	TKR1346 M4x15mm Flat Head Screw
x2	TKR1524 M3x12mm Cap Head Screw

Bag P

Final Assembly

Step P-6

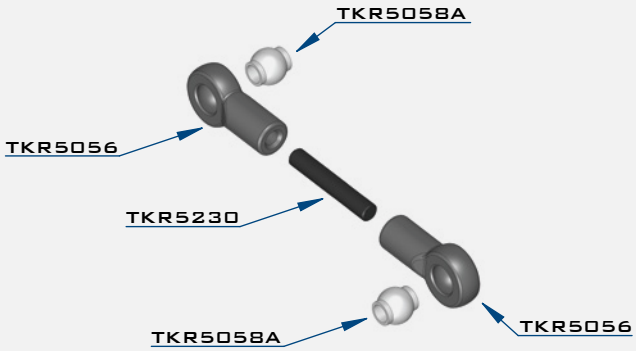

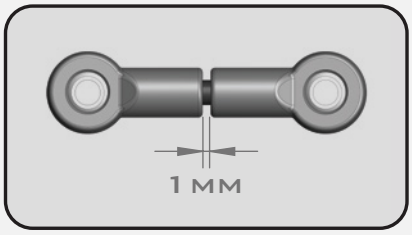

Step P-7

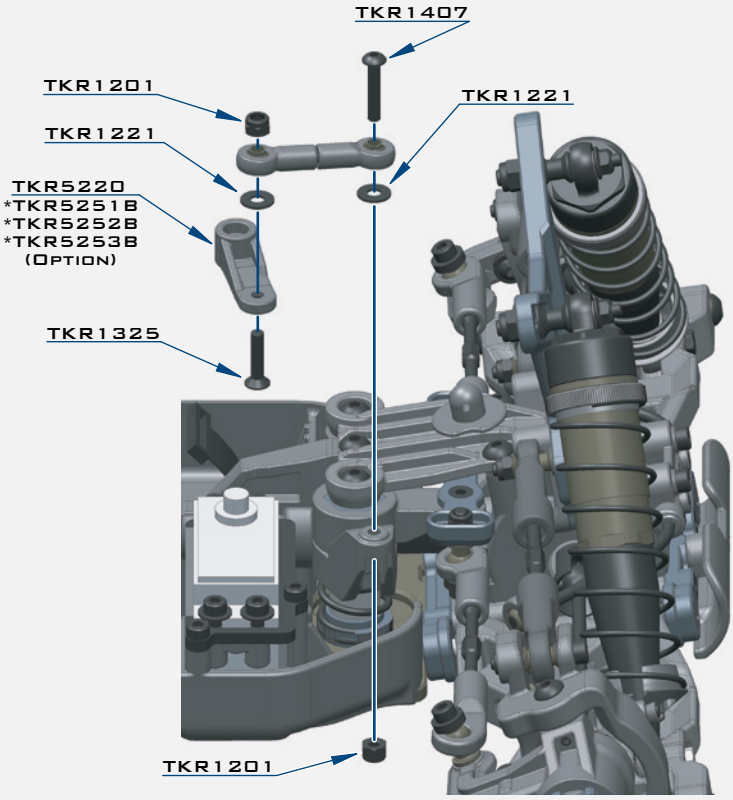

x2

TKR1201
M3 Lock Nut Black

x2

TKR1221
M3x8mm Washer

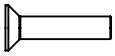

x1

TKR1325
M3x14mm Flat Head Screw

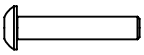

x1

TKR1407
M3x16mm Button Head Screw

x2

TKR5058A
Pivot Ball M3x5.8mm
No Flange

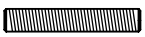

x1

TKR5230
M3x18 Threaded Rod

Step P-8

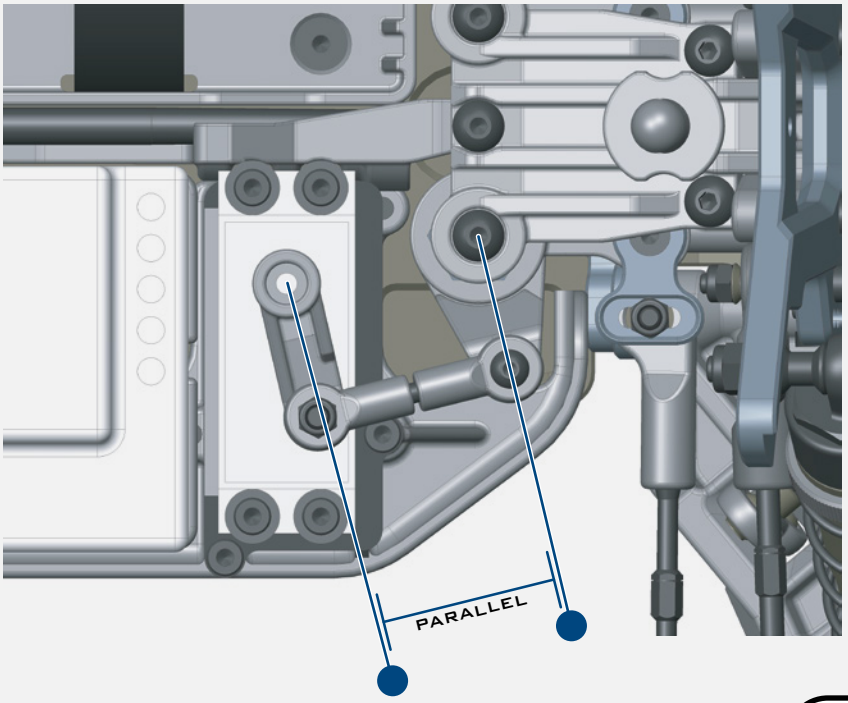

Note: Offset servo arm so it is parallel with the connecting arm at neutral or zero servo position.

Bag Q

Wing/Wheels/Body

Step Q-1

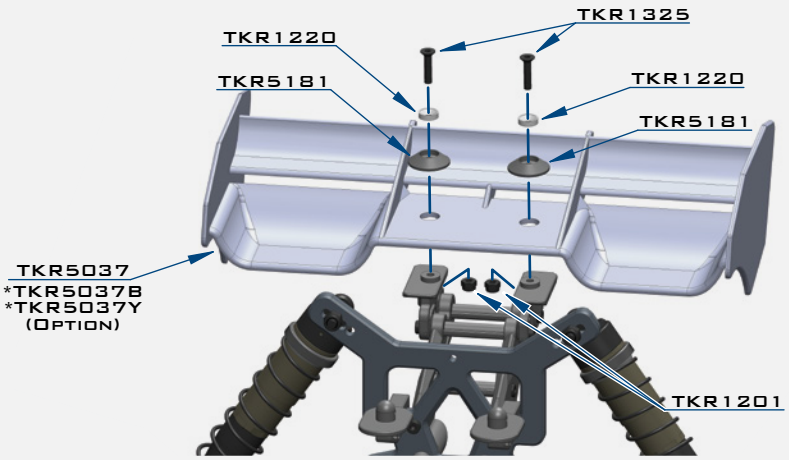

Step Q-2

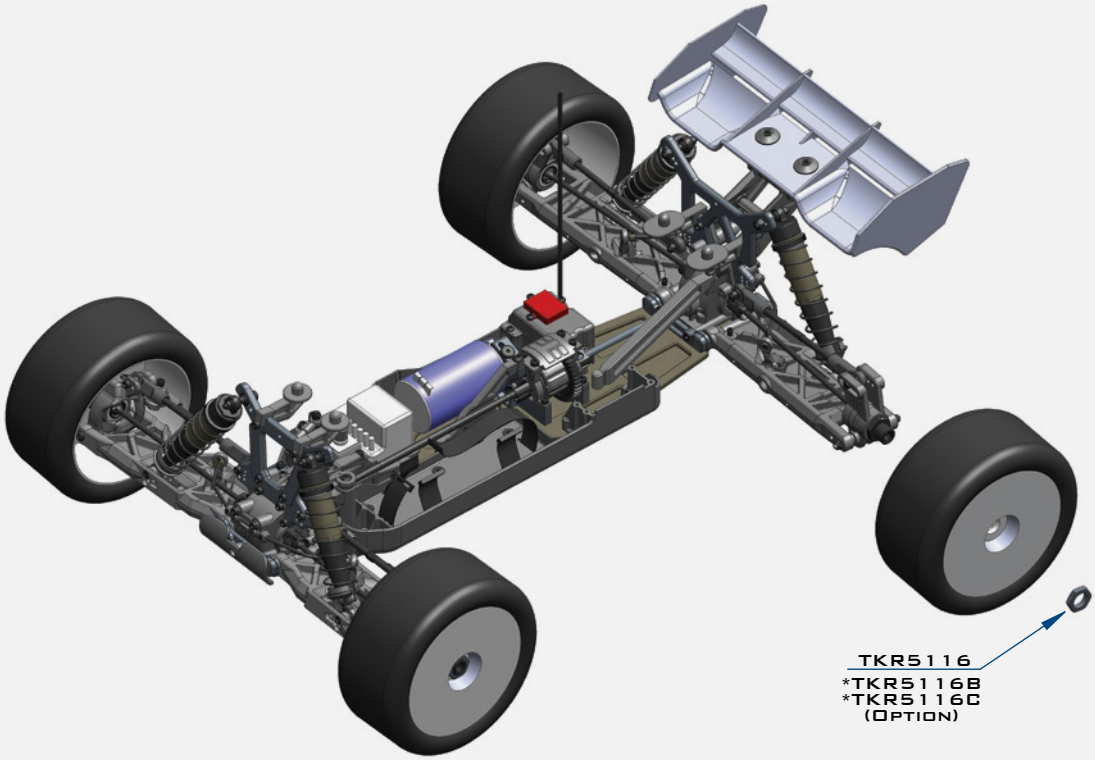

Step Q-3

Note: It may be necessary to cut holes in the body for ventilation.

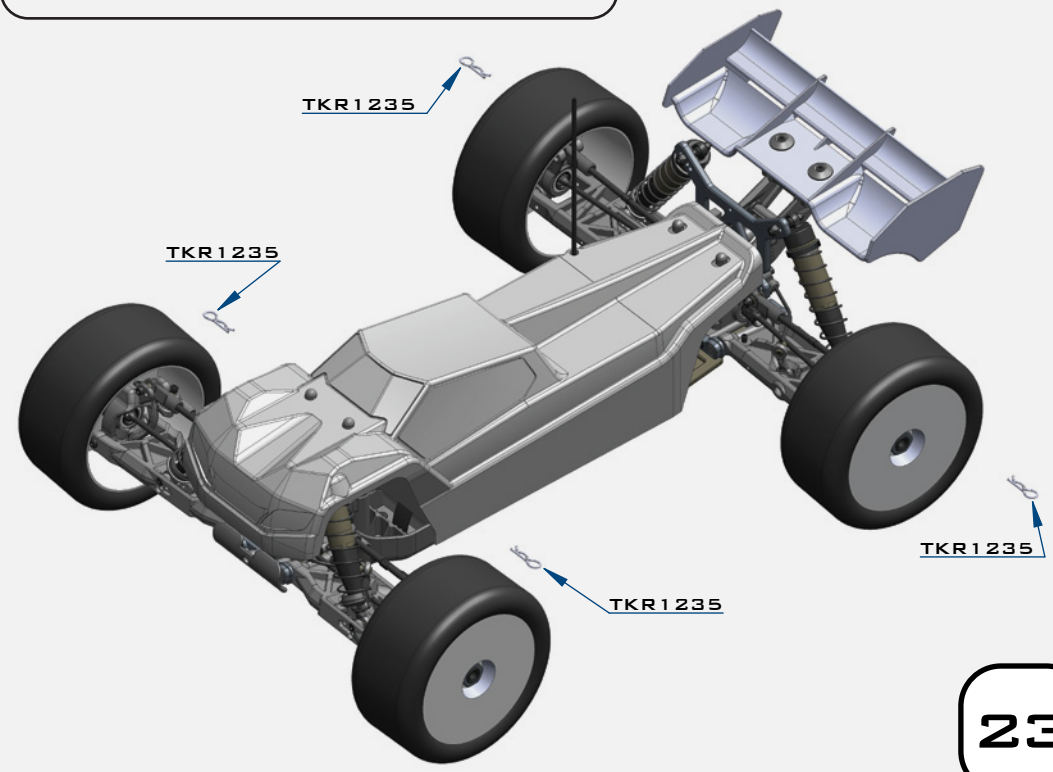


x2

TKR1201
M3 Lock Nut Black


x2

TKR1220
M4 Countersunk Washer

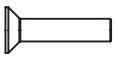
x2

TKR1325
M3x14mm Flat Head Screw


x2

TKR1235
Body Clip

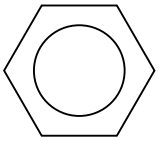
x4

TKR5116
Wheel Nut

TKR5602 - ET48.3 1/8th Competition Electric Truggy Kit

Parts List
TKR40007K – Battery Straps (EB48, black, 4 cell, 3pcs)
TKR5010 – Battery Tray, Mud Guard (EB48, left side)
TKR5011 – Radio Tray, Mud Guard (EB48, right side)
TKR5012 – Gearbox (front)
TKR5016B – Gearbox (rear, angled)
TKR5020 – Hinge Pins (inner, front/rear)
TKR5027 – Shock Standoffs (2pcs)
TKR5034 – Hinge Pins (outer, rear)
TKR5037 – Wing (white)
TKR5049A – Pivot Balls (6.8mm, no flng, sway bar, shck ends, almnm, 4pcs)
TKR5052A – Pivot Balls (6.8mm, inside camber, steering links, aluminum, 4pcs)
TKR5053A – Pivot Balls (6.8mm, flanged, outside camber, aluminum, 4pcs)
TKR5054A – Spindle Bushings (4pcs, aluminum, hard ano)
TKR5055A – Arm Bushings (4pcs, aluminum, hard ano)
TKR5056 – Rod Ends (5.8mm, brake/steering/sway bar linkage, 8pcs)
TKR5058A – Pivot Balls (5.8mm, no flange, brake/steering link, aluminum, 4pcs)
TKR5060 – Steering Servo Brace (aluminum, gun metal ano)
TKR5062 – Chassis Brace Set (front/rear/center)
TKR5065 – ESC Tray and Radio/Battery Tray Accessories
TKR5070 – Stub Axles (hardened steel, 2pcs)
TKR5071 – Wheel Hubs (17mm, aluminum, w/pins, 2pcs)
TKR5073 – CV Rebuild kit (f/r, for 2 axles)
TKR5075 – Diff Coupler (f/r, hardened steel)
TKR5079A – Stabilizer Balls (6.8mm, sway bars, aluminum, 4pcs)
TKR5086 – Sway Bar Mounts
TKR5100 – Ackerman Plate (aluminum, gun metal ano)
TKR101X - Servo Saver Spring (HD, EB48, SCT410, NB48)
TKR5102A – Steering Posts (aluminum)
TKR5103 – Servo Saver Post (aluminum, gun metal ano)
TKR5104 – Steering Bell Cranks
TKR5107 – Steering Top Plate, Center Diff Top Plate, Center Diff Rear Support
TKR5116 – Wheel Nuts (17mm, serrated, gun metal ano, M12x1.0, 4pcs)
TKR5122 – Steering Rack Bushings (aluminum, gun metal ano, 2pcs)
TKR5125 – O-Ring (ESC tray, 3pcs)
TKR5126 – Antenna tube (universal, w/ caps, 5pcs)
TKR5161 - V2 Adj. Hinge Pin Brace ("A" block, 7075, EB/NB/ET/NT/SCT)
TKR5162 - V2 Adj. Hinge Pin Brace ("B" block, 7075, EB/NB/ET/NT/SCT)
TKR5163 - V2 Adj. Hinge Pin Brace ("C" block, 7075, EB/NB/ET/NT/SCT)
TKR5164 - V2 Adj. Hinge Pin Brace ("D" block, 7075, EB/NB/ET/NT/SCT)
TKR5165 - V2 Hinge Pin Inserts, Wheelbase Shims (EB/NB/ET/NT/SCT)
TKR5166 - Front Bumper (revised, EB/NB/ET/NT48)
TKR5181 - Low Profile Wing Mount and Body Mounts (EB/NB48/EB48SL)
TKR5187 - Rod Ends (straight, 6.8mm, EB/NB/ET/NT48, 8pcs)
TKR5191 - Tapered Driveshaft (EB48, ET48, center, front, 7075 aluminum, black ano)
TKR5193 - Spindles (trailing, L/R, requires TKR5194, EB/NB/ET/NT48, EB/NB.3)
TKR5194 - Spindle Carriers (trailing, 15 degree, L/R, EB/NB/ET/NT48, EB/NB.3)
TKR5199 - Rear Hubs (L/R, CV or uni, EB/NB/ET/NT48, EB/NB.3)
TKR5211 – Motor Mount Insert (aluminum, gun metal ano)
TKR5220 – Servo Horns (steering, brakes)
TKR5230 – Steering linkage (M3x18mm threaded rod, 10pcs)
TKR5231 – Servo Saver Nut and Spring
TKR5260 - CNC Split Cntr Diff Mount (mtr mnt only, 7075, gun metal ano, EB/ET/SCT)
TKR5263 - Split Cntr Diff Mount (composite, requires TKR5260, EB/ET/SCT/SL)
TKR5401 - Body Mount Set (ET48, NT48)
TKR5423 – Turnbuckle (steering links, 2pcs, ET48, NT48)
TKR5428 – Shock Tower (front, 7075, gun metal, ET48, NT48)
TKR5429 – Shock Tower (rear, 7075, gun metal, ET48, NT48)
TKR5430 – Suspension Arms (rear, 2pcs, ET48, NT48)
TKR5436 – Suspension Arms (front, 2pcs, ET48, NT48)
TKR5450 – Turnbuckle (camber link, rear, 2pcs, ET48, NT48)
TKR5451 – Turnbuckle (camber link, front, 2pcs, ET48, NT48)
TKR5472 – Driveshafts (f/r, hardened steel, 2pcs, ET48, NT48)
TKR5482 – Sway Bar (front, 2.5mm, ET48, NT48)
TKR5493 – Sway Bar (rear, 2.6mm)
TKR5601 - Chassis (7075, hard anodized)
TKR5617 - Decal Sheet (ET48.3)
TKR5645 - Body (ET48, w/ window mask)
TKR5676 – Driveshaft (steel, center, rear)

Differential List
TKR5112X – Differential Outdrives (center, lightened)
TKR5113 – Differential Case (f/c/r)
TKR5114X – Differential Outdrives (f/r, lightened)
TKR5143 – Differential Seals (3pcs)
TKR5144 – Differential O-Rings (6pcs)
TKR5145B – Differential Shims (revised, 6x17mm, 6pcs)
TKR5149 – Differential Cross Pins (steel, 6pcs)
TKR5150 – Differential Gear Set (internal gears only)
TKR5237K – Spur Gear (44t, black, composite)
TKR5403 - Differential Ring Gear (40t, NT48 fr, ET48 fr/rr)
TKR5405 – Diff Pinion (straight cut, 9t, CNC, NT48)

Shocks List
TKR6003B – Non-Vented Shock Caps (aluminum, black ano, 2pcs)
TKR6007 - Shock Cap Bushings (4pcs, EB/NB/ET/NT/SCT)
TKR6008 – Shock Shaft Guide, Piston, and Bushing Set (for 2 shocks)
TKR6009 – Shock O-Ring and Bladder Set (for 2 shocks)
TKR6013 – Shock Adjustment Nuts (aluminum, gun metal ano, 2pcs)
TKR6015 – Shock Cartridge Caps (aluminum, gun metal ano, 2pcs)
TKR6016 – Shock Body (rear, aluminum, hard ano, 2pcs)
TKR6017 – Shock Shafts (rear, steel, 2pcs)
TKR6051 - Shock Pistons (CNC, conical, 8x1.3mm)
TKR6060 – Shock Body (rear, x-long, aluminum, hard ano, 2pcs)
TKR6061 – Shock Shafts (rear, x-long, steel, 2pcs)
TKR6081 – Shock Spring Set (rear, 1.6 x 10.0T, 90mm, green, 4.20 lb/in)
TKR6091 – Shock Spring Set (front, 1.6 x 8.5T, 80mm, green, 5.17 lb/in)
TKR6140 - Locking Shock Rod End and Spring Perch Set (EB/NB/ET/NT/SCT)
TKR6144 - Shock Boots (long length, EB/NB, 2pcs)
TKR6145 - Shock Boots (X-long length, rear EB/NB, 2pcs)

Bearings List
TKRBB050825 – Ball Bearing (5x8x2.5mm, 4pcs)
TKRBB05114 – Ball Bearing (5x11x4, 4pcs)
TKRBB05134 – Ball Bearing (5x13x4, 4pcs)
TKRBB06103 – Ball Bearing (6x10x3, 4pcs)
TKRBB08165 – Ball Bearing (8x16x5, 4pcs)
TKRBB13194 – Ball Bearing (13x19x4, 4pcs)

Hardware List
TKR1200 – M2.5 Locknuts (zinc finish, 10pcs)
TKR1201 – M3 Locknuts (black, 10pcs)
TKR1202 - M4 Locknuts (black, 10pcs)
TKR1211 – M3 Locknuts (flanged, black, 10pcs)
TKR1220 – M3 Countersunk Washers (aluminum, natural, 10pcs)
TKR1221 – M3x8mm Washer (black, 10pcs)
TKR1222 – 13x16x.1mm Diff Shims (10pcs)
TKR1226 - 5x7x.2mm shims (10pcs)
TKR1228 - M4 Countersunk Washer (black, 10pcs)
TKR1235 – Body Clips (10pcs)
TKR1238 - Droop Adjustment Screws (M4x10mm, 8pcs)
TKR1322 – M3x8mm Flat Head Screws (black, 10pcs)
TKR1323 – M3x10mm Flat Head Screws (black, 10pcs)
TKR1325 - M3x14mm Flat Head Screws (black, 10pcs)
TKR1327 - M3x16mm Flat Head Screws (black, 10pcs)
TKR1333 - M3x40mm Flat Head Screws (black, 10pcs)
TKR1341 - M4x6mm Flat Head Screws (black, 10pcs)
TKR1343 - M4x10mm Flat Head Screws (black, 10pcs)
TKR1344 - M4x12mm Flat Head Screws (black, 10pcs)
TKR1346 - M4x15mm Flat Head Screws (black, 10pcs)
TKR1401 - M3x6mm Button Head Screws (black, 10pcs)
TKR1402 - M3x8mm Button Head Screws (black, 10pcs)
TKR1407 - M3x16mm Button Head Screws (black, 10pcs)
TKR1443 - M4x10mm Button Head Screws (black, 10pcs)
TKR1445 - M4x14mm Button Head Screws (black, 10pcs)
TKR1447 - M4x16mm Button Head Screws (black, 10pcs)
TKR1522 - M3x8mm Cap Head Screws (black, 10pcs)
TKR1523 – M3x10mm Cap Head Screws (black, 10pcs)
TKR1524 - M3x12mm Cap Head Screws (black, 10pcs)
TKR1525 - M3x14mm Cap Head Screws (black, 10pcs)
TKR1529 - M3x20mm Cap Head Screws (black, 10pcs)
TKR1601 - M3x4mm Set Screws (black, 10pcs)
TKR1603 - M5x4mm Set Screws (black, 10pcs)
TKR1605 - M3x10mm Set Screws (black, 10pcs)

Option Parts
TKR1103 - Turnbuckle Wrench (4mm, 5mm, hardened steel)
TKR1116 - 17mm Wheel Wrench, Shock Cap Tool
TKR1119 - 5.5mm / 7.0mm Wrench (hardened steel)
TKR1115 - Pivot Ball and Shock Multi-tool (aluminum)
TKR5037B – Wing (black)
TKR5037Y – Wing (yellow)
TKR5060C – Steering Servo Brace (carbon fiber)
TKR5070A – Stub Axles (Aluminum, 2pcs)
TKR5071B – Wheel Hubs (17mm, alum, ltnd, gun metal ano, 1mm off, w/pins, 2pcs)
TKR5071C – Wheel Hubs (17mm, alum, ltnd, gun metal ano, 2mm off, w/pins, 2pcs)
TKR5071X – Wheel Hubs (17mm, aluminum, lightened, gun metal ano, w/pins, 2pcs)
TKR5115 – Spur Gear (44t, hardened steel, lightened)
TKR5147 – Complete Center Differential
TKR5149A - Diff Cross Pins (aluminum, 6pcs, requires TKR5150)
TKR5199A - Aluminum Rear Hubs (gun metal ano, EB/NB/ET/NT, 2pcs)
TKR5211X – Motor Mount Insert (aluminum, lightened, gun metal ano)
TKR5237 – Spur Gear (44t, composite, natural color)
TKR5251B – Aluminum Servo Horn (23t spline, M3 clamp, double hole)
TKR5252B – Aluminum Servo Horn (24t spline, M3 clamp, double hole)
TKR5253B – Aluminum Servo Horn (25t spline, M3 clamp, double hole)
TKR5261 - CNC Split Cntr Diff Mnt (complete, 7075, gun metal ano, EB/ET/SCT)
TKR5262 - CNC Split Cntr Diff Mount (diff mounts only, 7075, gun metal ano, EB/ET/SCT)
TKR5433 – Rear Arm Mud Guards (ET48, NT48)
TKR5446 – Complete F/R Differential (ET48 fr/rr, NT48 front only)
TKR5480 – Sway Bar (front, 2.3mm, ET48, NT48)
TKR5481 – Sway Bar (front, 2.4mm, ET48, NT48)
TKR5483 – Sway Bar (front, 2.6mm, ET48, NT48)
TKR5484 – Sway Bar (front, 2.8mm, ET48, NT48)
TKR5485 – Sway Bar (front, 3.0mm, ET48, NT48)
TKR5490 – Sway Bar (rear, 2.3mm)
TKR5491 - Sway Bar (2.4mm, rear)
TKR5492 – Sway Bar (rear, 2.5mm)
TKR5494 – Sway Bar (rear, 2.8mm)
TKR5495 – Sway Bar (rear, 3.0mm)
TKR5676A – Driveshaft (aluminum, center, rear)
TKR6003 – Vented Shock Caps (aluminum, black ano, 2pcs)
TKR6009B – Shock O-Ring Set (16pcs)
TKR6017T – Shock Shafts w/ TiNi coating (rear, steel, 2pcs)
TKR6018 – Shock Cap and Spring Adjuster Set (composite, for 2 shocks)
TKR6050 - Shock Pistons (CNC, conical, 10x1.1mm)
TKR6052 - Shock Pistons (CNC, conical, 10x1.2mm)
TKR6053 - Shock Pistons (CNC, conical, 8x1.4mm)
TKR6054 - Shock Pistons (CNC, conical, 10x1.3mm)
TKR6061T – Shock Shafts w/ TiNi coating (rear, x-long, steel, 2pcs)
TKR6063 – Shock Pistons (CNC, conical, 6×1.5, 10.6mm^2)
TKR6064 – Shock Pistons (CNC, conical, 6×1.6, 12.1mm^2)
TKR6065 – Shock Piston Blanks (CNC, conical, 16 dimples, 16mm)
TKR6080 – Shock Spring Set (rear, 1.6 x 10.5T, 90mm, pink, 3.96 lb/in)
TKR6082 – Shock Spring Set (rear, 1.6 x 9.5T, 90mm, yellow, 4.48 lb/in)
TKR6083 – Shock Spring Set (rear, 1.6 x 9.0T, 90mm, orange, 4.80 lb/in)
TKR6090 – Shock Spring Set (front, 1.6 x 9.0T, 80mm, pink, 4.80 lb/in)
TKR6092 – Shock Spring Set (front, 1.6 x 8.0T, 80mm, yellow, 5.60 lb/in)
TKR6093 – Shock Spring Set (front, 1.6 x 7.5T, 80mm, orange, 6.11 lb/in)
TKR6146 – Shock Cartridge Set (CNC, Delrin, EB/NB/ET/NT/SCT)
TKR6159 - Shock Pistons (CNC, tapered, 4x1.8mm)
TKR6160 - Shock Piston Blanks (CNC, tapered, 16 dimples)

TEKNO RC — Setup Sheet — ET48.3

Name: Box Stock **Date:** _____ **Event:** _____

Track: Indoor ☐ Outdoor ☐ **Size:** Small ☐ Medium ☐ Large ☐ **Traction:** Low ☐ Med ☐ High ☐

Surface: Smooth ☐ Bumpy ☐ Rutted ☐ **Type:** Loose/Loamy ☐ Hard Pack ☐ Blue Groove ☐ Clay ☐

Condition: Dusty ☐ Dry ☐ Wet ☐ Muddy ☐

Bumpsteer/Ackerman/Servo Saver/Steering Stop:

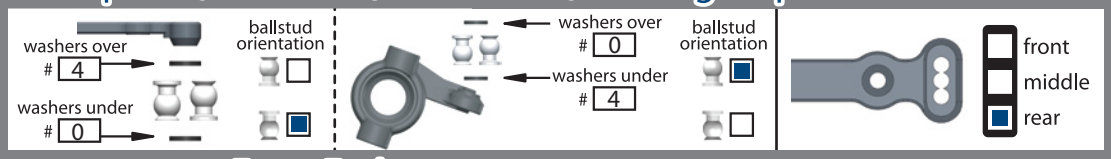

Front End:

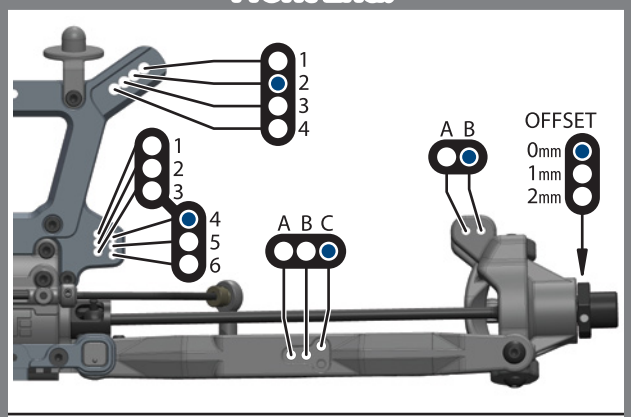

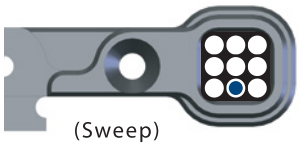

"A" Block
(0° WITH CENTER DOT INSERT)

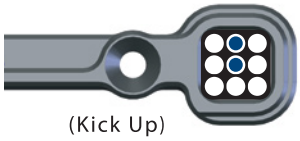

"B" Block
(10° WITH CENTER DOT INSERT)

Rear End:

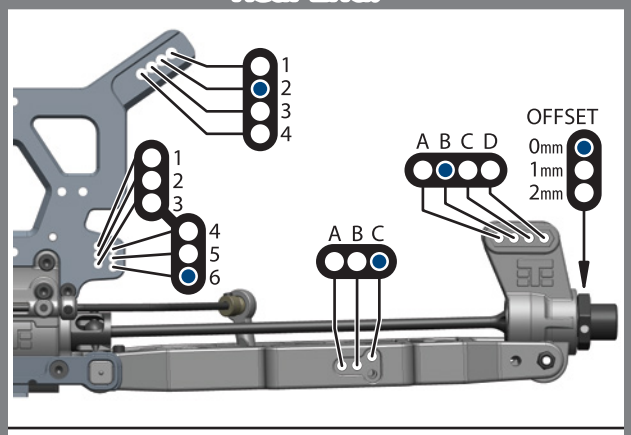

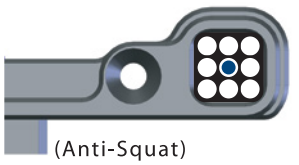

"C" Block
(2° WITH CENTER DOT INSERT)

"D" Block
(3° WITH CENTER DOT INSERT)

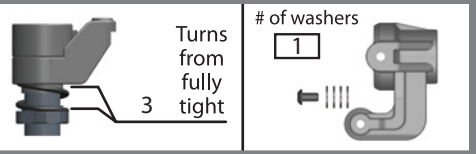

Suspension:

	FRONT	REAR
RIDE HEIGHT	37	40
CAMBER	-2	-2
CASTER	15 deg	
SWEEP	0 deg	
KICK UP	8.5 deg	
ANTI-SQUAT		2 deg
TOE (in/out)	.5 deg out	3 deg in
SWAY BAR	2.5	2.6
SHOCK LENGTH (DROOP)	122	136

Body/Wing:

BODY MAKE	Tekno
WING MAKE	Tekno

POSITION SETTINGS

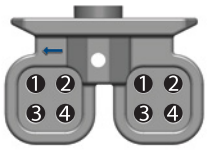

1 - REARWARD LOW
2 - FORWARD LOW
3 - REARWARD HIGH
4 - FORWARD HIGH

DOWNFORCE SETTINGS

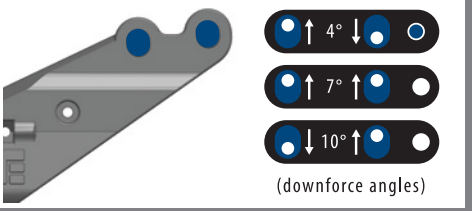

(downforce angles)

Wheelbase:

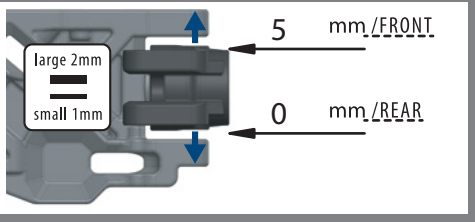

Shocks:

	FRONT	REAR
OIL	650	600
BRAND	Tekno	Tekno
PISTON	8x1.3 cone up	8x1.3 cone up
SPRING	green	green
REBOUND	0 %	0 %
STD/EMUL/VENT	STD	STD

NOTES:

Tires / Wheels:

	FRONT	REAR
BRAND/TREAD		
COMPOUND		
INSERT		
WHEEL		

NOTES:

Differential Oil:

FRONT	CENTER	REAR
10k	10k	5k

Electronics:

ESC:	
BATTERY:	
MOTOR:	
RADIO:	
SERVO:	300oz min

Drivetrain:

PINION SIZE	

Chassis Braces:

Front ■ Middle ■ Rear ■

(front brace is always recommended)

Notes:

TEKNO RC — Setup Sheet — ET48.3

Name: _____ **Date:** _____ **Event:** _____

Track: Indoor ☐ Outdoor ☐ **Size:** Small ☐ Medium ☐ Large ☐ **Traction:** Low ☐ Med ☐ High ☐

Surface: Smooth ☐ Bumpy ☐ Rutted ☐ **Type:** Loose/Loamy ☐ Hard Pack ☐ Blue Groove ☐ Clay ☐

Condition: Dusty ☐ Dry ☐ Wet ☐ Muddy ☐

Bumpsteer/Ackerman/Servo Saver/Steering Stop:

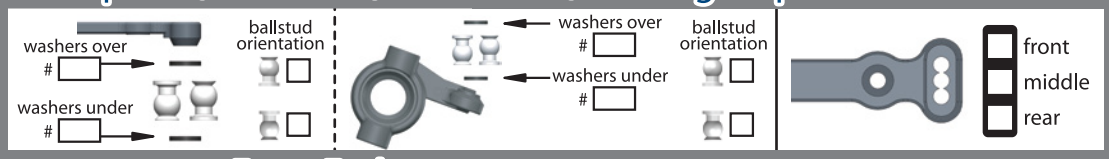

Front End:

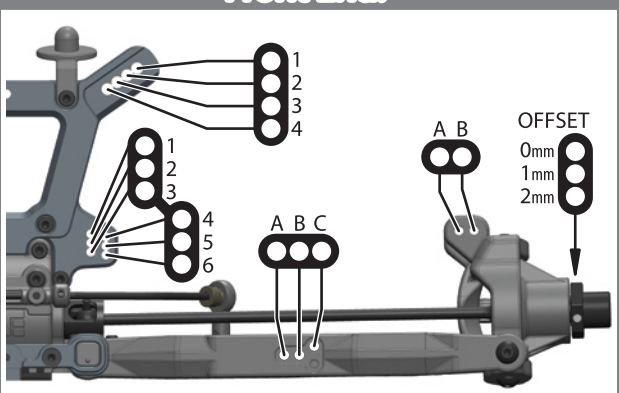

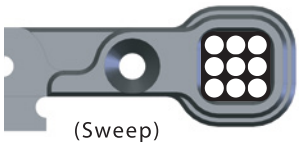

"A" Block
(0° WITH CENTER DOT INSERT)

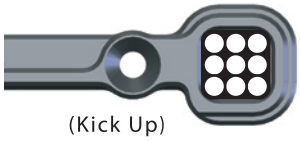

"B" Block
(10° WITH CENTER DOT INSERT)

Rear End:

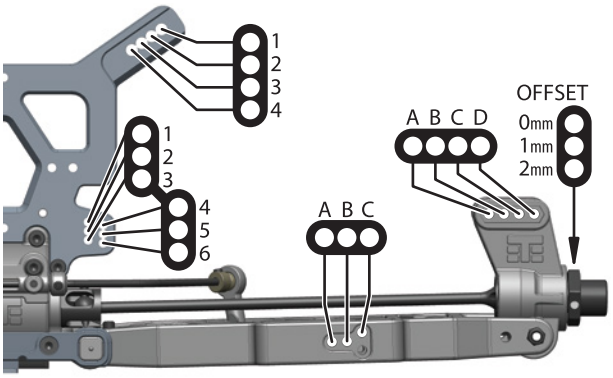

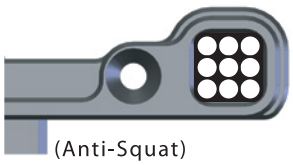

"C" Block
(2° WITH CENTER DOT INSERT)

"D" Block
(3° WITH CENTER DOT INSERT)

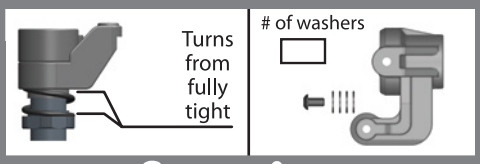

Suspension:

	FRONT	REAR
RIDE HEIGHT		
CAMBER		
CASTER		
SWEEP		
KICK UP		
ANTI-SQUAT		
TOE (in/out)		
SWAY BAR		
SHOCK LENGTH (DROOP)		

Body/Wing:

BODY MAKE	
WING MAKE	

POSITION SETTINGS

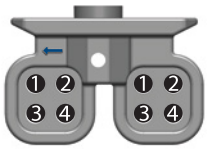

- 1 - REARWARD LOW
- 2 - FORWARD LOW
- 3 - REARWARD HIGH
- 4 - FORWARD HIGH

DOWNFORCE SETTINGS

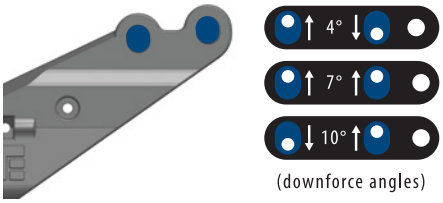

Wheelbase:

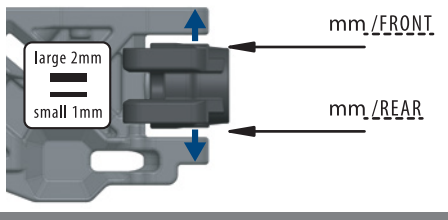

Shocks:

	FRONT	REAR
OIL		
BRAND		
PISTON		
SPRING		
REBOUND	%	%
STD/EMUL/VENT		

NOTES:

Tires / Wheels:

	FRONT	REAR
BRAND/TREAD		
COMPOUND		
INSERT		
WHEEL		

NOTES:

Differential Oil:

FRONT	CENTER	REAR

Electronics:

ESC:	
BATTERY:	
MOTOR:	
RADIO:	
SERVO:	

Drivetrain:

PINION SIZE	(teeth)

Chassis Braces:

Front ☐ Middle ☐ Rear ☐

(front brace is always recommended)

Notes:

TEKNO RC — Setup Sheet — ET48.3

Name: _____ **Date:** _____ **Event:** _____

Track: Indoor ☐ Outdoor ☐ **Size:** Small ☐ Medium ☐ Large ☐ **Traction:** Low ☐ Med ☐ High ☐

Surface: Smooth ☐ Bumpy ☐ Rutted ☐ **Type:** Loose/Loamy ☐ Hard Pack ☐ Blue Groove ☐ Clay ☐

Condition: Dusty ☐ Dry ☐ Wet ☐ Muddy ☐

Bumpsteer/Ackerman/Servo Saver/Steering Stop:

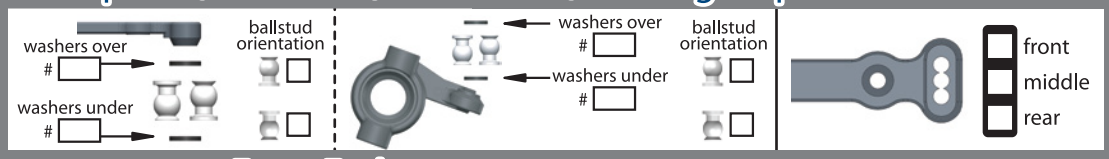

Front End:

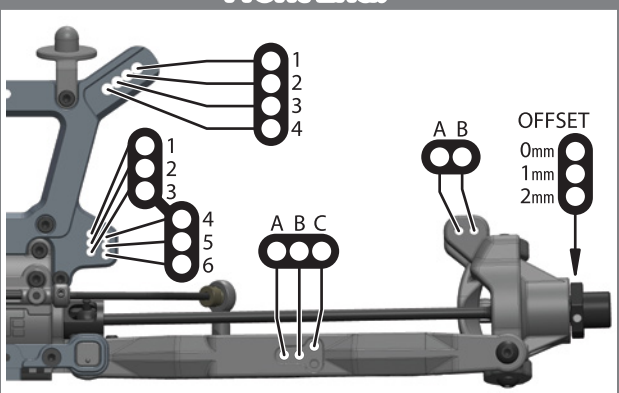

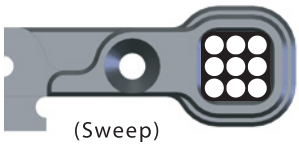

"A" Block
(0° WITH CENTER DOT INSERT)

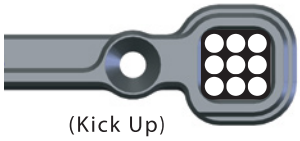

"B" Block
(10° WITH CENTER DOT INSERT)

Rear End:

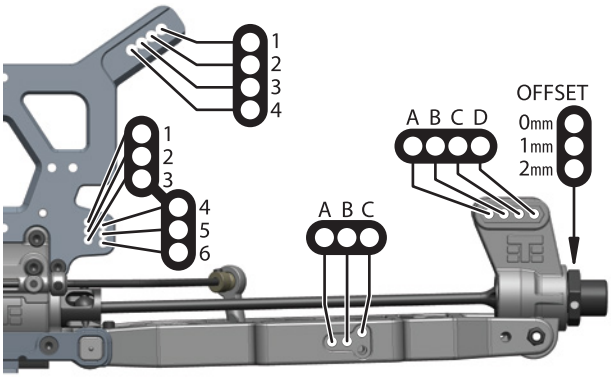

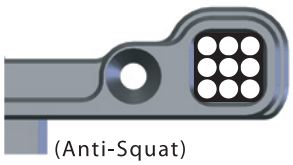

"C" Block
(2° WITH CENTER DOT INSERT)

"D" Block
(3° WITH CENTER DOT INSERT)

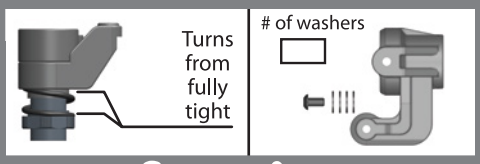

Suspension:

	FRONT	REAR
RIDE HEIGHT		
CAMBER		
CASTER		
SWEEP		
KICK UP		
ANTI-SQUAT		
TOE (in/out)		
SWAY BAR		
SHOCK LENGTH (DROOP)		

Body/Wing:

BODY MAKE	
WING MAKE	

POSITION SETTINGS

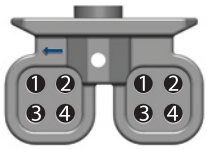

- 1 - REARWARD LOW
- 2 - FORWARD LOW
- 3 - REARWARD HIGH
- 4 - FORWARD HIGH

DOWNFORCE SETTINGS

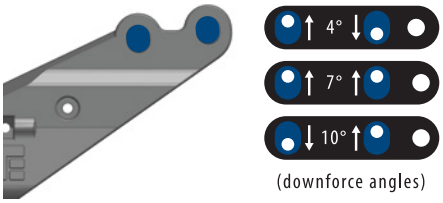

Wheelbase:

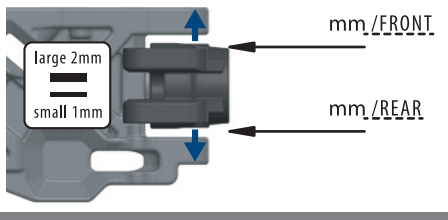

Shocks:

	FRONT	REAR
OIL		
BRAND		
PISTON		
SPRING		
REBOUND	%	%
STD/EMUL/VENT		

NOTES:

Tires / Wheels:

	FRONT	REAR
BRAND/TREAD		
COMPOUND		
INSERT		
WHEEL		

NOTES:

Differential Oil:

FRONT	CENTER	REAR

Electronics:

ESC:	
BATTERY:	
MOTOR:	
RADIO:	
SERVO:	

Drivetrain:

PINION SIZE	(teeth)

Chassis Braces:

Front ☐ Middle ☐ Rear ☐

(front brace is always recommended)

Notes:

Tekno RC
10755 Scripps Poway Pkwy #598
San Diego CA 92131
USA

www.teknorc.com